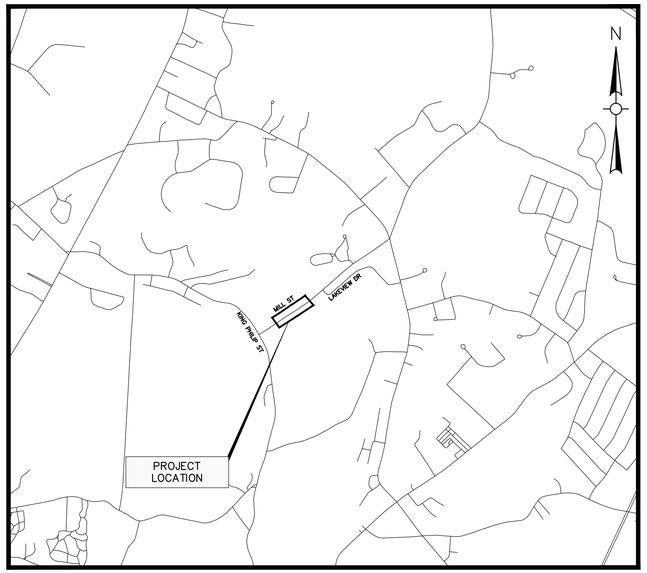

SCALE: 1" = 500'

TOWN OF RAYNHAM, MA
PROPOSED BRIDGE REPLACEMENT
BRIDGE NO R-02-024
MILL STREET OVER PINE SWAMP BROOK

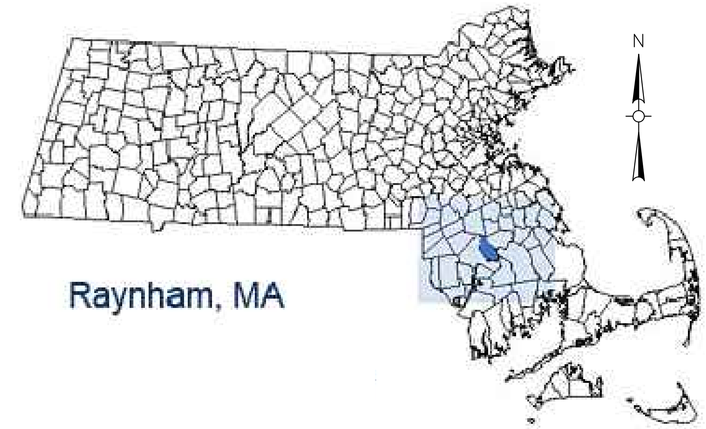

NOT TO SCALE

CONTENTS

SHEET NO.	SHEET NAME	SHEET TITLE
1	C-1	LEGEND, ABBREVIATIONS, AND GENERAL NOTES
2	C-2	EXISTING CONDITIONS PLAN
3	C-3	TYPICAL SECTION
4-5	C-4 - C-5	BORING LOGS
6	C-6	ROADWAY PLAN
7	C-7	GRADING AND TIE-IN PLAN
8	C-8	UTILITY PLAN
9	C-9	ROADWAY PROFILE
10-12	C-10 - C-12	CROSS SECTIONS
13	TR-1	DETOUR PLAN
14-16	DET 1- DET 3	DETAILS
17	S-1	EXISTING PLAN, PROPOSED PLAN, AND GENERAL NOTES
18	S-2	FOOTING LAYOUT
18	S-3	BRIDGE SECTIONS AND ELEVATIONS
20	S-4	LAYOUT PLAN
21	S-5	BRIDGE DETAILS
22	S-6	STAGE CONSTRUCTION/WATER HANDLING PLAN
23	S-7	THRIE - BEAM RAIL DETAIL

Chapter 85 Section 35 Review and Approval

In accordance and compliance with the requirements of Chapter 85 Section 35 of the Massachusetts General Laws, the Contractor shall submit to the Massachusetts Department of Transportation all construction drawings and design calculations that shall be used to fabricate and construct the structure denoted on these plans for review and approval. This approval shall constitute the final approval as stipulated by Chapter 85 Section 35 of the Massachusetts General Laws.

COMMONWEALTH OF MASSACHUSETTS
MassDOT, Highway Division

CONCEPTUAL DESIGN IS ACCEPTABLE TO MASSDOT FOR CONTRACTING

STATE BRIDGE ENGINEER _____ DATE _____

GRAHAM WATERS
TOWN ADMINISTRATOR

ED BUCKLEY
HIGHWAY SUPERINTENDENT

COMMONWEALTH OF MASSACHUSETTS
LAURENCE F. KEEGAN, JR.
CIVIL
NO. 33708
REGISTERED PROFESSIONAL ENGINEER
6-14-22

CIVIL DESIGN
(SHEETS 1, 3-16)

COMMONWEALTH OF MASSACHUSETTS
SCOTT R. BRUSO
STRUCTURAL
No. 48561
REGISTERED PROFESSIONAL ENGINEER
2022.06.14 15:42:32-04'00'

STRUCTURAL
(SHEETS 17-23)

JUNE 15, 2022

THESE PLANS ARE SUPPLEMENTED BY THE 2022 STANDARD SPECIFICATIONS FOR HIGHWAYS AND BRIDGES, THE OCTOBER 2017 CONSTRUCTION STANDARD DETAILS, THE 2015 OVERHEAD SIGNAL STRUCTURE AND FOUNDATION STANDARD DRAWINGS, MASSDOT TRAFFIC MANAGEMENT PLANS AND DETAIL DRAWINGS, THE 1990 STANDARD DRAWINGS FOR SIGNS AND SUPPORTS, THE 1968 STANDARD DRAWINGS FOR TRAFFIC SIGNALS AND HIGHWAY LIGHTING, AND THE LATEST EDITION OF THE AMERICAN STANDARD FOR NURSERY STOCK.

SURVEY INFORMATION DERIVED FROM:
WESTON & SAMPSON LAND SURVEYORS, INC.

VERTICAL DATUM - NAVD88
HORIZONTAL DATUM - NAD83

DESIGNED BY:
WESTON & SAMPSON ENGINEERS, INC.
100 FOXBOROUGH BLVD, SUITE 250
FOXBOROUGH, MA 02035

Weston & Sampson℠
100 Foxborough Blvd, Foxborough, MA 02035
508.698.3034 800.SAMPSON
www.westonandsampson.com

GENERAL NOTES

1. TOPOGRAPHICAL INFORMATION BASED ON AN ON THE GROUND SURVEY PERFORMED BY WESTON & SAMPSON LAND SURVEYS, INC. IN MARCH 2019.

2. THE LOCATIONS OF EXISTING UNDERGROUND UTILITIES ARE SHOWN IN AN APPROXIMATE WAY ONLY AND HAVE NOT BEEN INDEPENDENTLY VERIFIED BY THE OWNER OR ITS REPRESENTATIVE. THE CONTRACTOR SHALL DETERMINE THE EXACT LOCATION OF ALL EXISTING UTILITIES BEFORE COMMENCING WORK, AND AGREES TO BE FULLY RESPONSIBLE FOR ANY AND ALL DAMAGES WHICH MIGHT BE OCCASIONED BY THE CONTRACTOR'S FAILURE TO EXACTLY LOCATE AND PRESERVE ANY AND ALL UNDERGROUND UTILITIES. THE CONTRACTOR SHALL DIG TEST PITS WITH THE LOCATIONS BEING APPROVED BY THE ENGINEER PRIOR TO COMMENCEMENT OF WORK TO EXACTLY LOCATE EXISTING UTILITIES.

3. WHERE AN EXISTING UTILITY IS FOUND TO CONFLICT WITH THE PROPOSED WORK, THE LOCATION, ELEVATION AND SIZE OF THE UTILITY SHALL BE ACCURATELY DETERMINED WITHOUT DELAY BY THE CONTRACTOR AND THE INFORMATION FURNISHED TO THE ENGINEER FOR RESOLUTION OF THE CONFLICT.

4. THE CONTRACTOR SHALL MAKE ALL ARRANGEMENTS FOR THE ALTERATION AND ADJUSTMENT OF ELECTRIC, TELEPHONE AND ANY OTHER PRIVATE UTILITIES BY THE UTILITY OWNER. ANY ALTERATIONS SHALL BE INCIDENTAL TO THE PROJECT. THE CONTRACTOR IS RESPONSIBLE FOR THE TEMPORARY SUPPORT OF ALL UTILITIES TO REMAIN IN PLACE AND SHALL DESCRIBE IN WRITING, TO THE SATISFACTION OF THE ENGINEER, HIS METHOD OF TEMPORARY SUPPORT.

5. AREAS OUTSIDE THE LIMITS OF PROPOSED WORK DISTURBED BY THE CONTRACTOR'S OPERATIONS SHALL BE RESTORED BY THE CONTRACTOR TO THEIR ORIGINAL CONDITION AT THE CONTRACTOR'S EXPENSE.

6. THE TERM "PROPOSED (PROP)" INDICATES WORK TO BE CONSTRUCTED USING NEW MATERIALS OR, WHERE APPLICABLE, RE-USING EXISTING MATERIALS IDENTIFIED AS "REMOVE AND RESET (R&R)".

7. ALL EXISTING STATE, COUNTY AND TOWN LOCATION LINES AND PRIVATE PROPERTY LINES HAVE BEEN ESTABLISHED FROM AVAILABLE INFORMATION AND THEIR EXACT LOCATION ARE NOT GUARANTEED.

8. ALL EXCESS MATERIAL FROM ROADWAY RECONSTRUCTION OR THE EXCAVATION PROCESS SHALL BE REUSED ON SITE OR REMOVED FROM THE SITE AND DISPOSED OF IN A LEGAL AND PROPER MANNER.

9. THE CONTRACTOR SHALL CALL DIGSAFE AT 1-888-344-7233 AT LEAST 72 HOURS, SATURDAYS, AND HOLIDAYS EXCLUDED, PRIOR TO EXCAVATING AT ANY LOCATION. A COPY OF THE DIGSAFE PROJECT REFERENCE NUMBER(S) SHALL BE GIVEN TO THE TOWN PRIOR TO EXCAVATION.

10. IT IS THE RESPONSIBILITY OF THE CONTRACTOR TO HIRE A PROFESSIONAL LAND SURVEYOR REGISTERED IN THE COMMONWEALTH OF MASSACHUSETTS FOR ALL LAYOUT WORK INCLUDING BASELINE LAYOUT. LAYOUT SHALL INCLUDE ALL PROPOSED WORK AS SHOWN IN THE CONTRACT DOCUMENTS, OR AS REQUIRED BY THE ENGINEER OR TOWN. ONCE LAID OUT, ALL PROPOSED WORK SHALL BE DEEMED ACCEPTABLE BY THE ENGINEER OR TOWN PRIOR TO ANY COMMENCEMENT OF WORK. ANY AND ALL WORK RELATED TO THE CONSTRUCTION LAYOUT SHALL BE INCIDENTAL TO THE PROJECT.

11. JOINTS BETWEEN HOT MIX ASPHALT TRENCH PAVEMENT AND SAWCUT EXISTING PAVEMENT SHALL BE SEALED WITH BITUMEN AND BACKSANDED.

12. IF DEEMED NECESSARY DUE TO THE WORK, THE CONTRACTOR SHALL COORDINATE WITH THE TOWN OF RAYNHAM HIGHWAY DEPARTMENT, FIRE DEPARTMENTS, AND THE ENGINEERS FOR APPROVAL OF SHUTTING DOWN ANY EXISTING WATER MAINS AND SHALL ALSO OBTAIN APPROVAL FOR DISRUPTING ANY EXISTING SEWER FLOWS.

13. THE CONTRACTOR SHALL BE AWARE THAT ONLY TOWN PERSONNEL ARE ALLOWED TO OPERATE WATER GATES AND HYDRANTS. ANY REQUESTS TO OPERATE THE GATES SHALL BE COORDINATED THROUGH THE ENGINEER.

14. THE EXISTING GAS MAIN LOCATIONS ARE SHOWN IN AN APPROXIMATE LOCATION. THE CONTRACTOR IS RESPONSIBLE FOR CONTACTING THE GAS COMPANY PRIOR TO COMMENCEMENT OF ANY WORK AND CONFIRMING SIZES, TYPES OF GAS LINES, AND EXACT LOCATIONS OR CHANGE OF PIPE TYPE. ALL COORDINATION AND ARRANGEMENTS WITH THE UTILITY COMPANIES SHALL BE INCIDENTAL TO THE PROJECT. ANY DELAY IN WORK DUE TO CONFLICTS WITH THE PROPOSED WORK AND ACTUAL LOCATION OF EXISTING GAS MAIN SHALL BE INCIDENTAL TO THE PROJECT.

15. THE CONTRACTOR SHALL COORDINATE ANY WORK FOR THE PROJECT WITH ALL ADJACENT/CONCURRENT PROJECTS AND CONTRACTORS.

16. THE CONTRACTOR SHALL INSTALL PRIOR TO COMMENCEMENT OF WORK, MAINTAIN, AND REMOVE AT THE END OF THE PROJECT INLET SEDIMENT CONTROL BAGS IN ALL CATCH BASINS, WITHIN OR ADJACENT TO THE PROJECT LIMITS. THE CONTRACTOR SHALL ALSO MAINTAIN SILT FENCE AND COMPOST FILTER TUBES AS SHOWN ON THE PLANS THROUGHOUT THE DURATION OF THE PROJECT AND REMOVE AT THE END.

17. ANY GRASS AREAS DISTURBED BY THE WORK SHALL BE RESTORED WITH LOAM AND SEED.

18. ANY LANDSCAPED AREAS DISTURBED BY THE WORK SHALL BE RESTORED TO EXISTING CONDITIONS WITH EXISTING OR NEW GROUND COVER MATERIALS AS DIRECTED BY THE ENGINEER. ANY PLANTS, SHRUBS, OR FLOWERS DISTURBED BY THE WORK SHALL BE RESET TO EXISTING CONDITIONS OR REPLACED WITH NEW PLANTS, SHRUBS, OR FLOWERS AS DIRECTED BY THE ENGINEER. ALL WORK TO RESTORE LANDSCAPE AREAS, NEW GROUND COVER MATERIALS, NEW PLANTS, NEW SHRUBS, OR NEW FLOWERS REQUIRED BY THE ENGINEER SHALL BE INCIDENTAL TO THE PROJECT.

19. CONTRACTOR TO COORDINATE WITH UTILITY POLE OWNERS IN AREAS WHERE UNDERGROUND UTILITY WORK IS WITHIN CLOSE PROXIMITY AND POSSIBLE UTILITY POLE SHORING IS REQUIRED WHILE INSTALLING PROPOSED UTILITIES.

20. CONTRACTOR SHALL PROVIDE AT LEAST ONE TEMPORARY DIVERSION CHANNEL WHICH MUST CONSIST OF EITHER A GRAVITY FED TRENCH OR A MINIMUM 3-FOOT DIAMETER GRAVITY-FED PIPE TO ENSURE PASSAGE FOR AMERICAN EELS AND ELVERS (JUVENILE EELS), TEMPORARY DIVERSION MUST BE PROVIDED FOR ANY CONSTRUCTION OCCURRING FROM MARCH 15TH TO JUNE 30TH AND FROM SEPTEMBER 15TH TO OCTOBER 31ST.

21. HORIZONTAL DATUM IS NORTH AMERICAN DATUM (NAD) 1983 AND VERTICAL DATUM IS NORTH AMERICAN VERTICAL DATUM (NAVD) 1988.

22. WHEN CONNECTING TO AN EXISTING UTILITY STRUCTURE ALL PIPE PENETRATIONS SHALL BE MECHANICALLY CORED WITH A SUFFICIENT OPENING TO ACCOMMODATE THE PIPE AND ANY REQUIRED GASKETED CONNECTIONS.

GENERAL SYMBOLS

EXISTING	PROPOSED	DESCRIPTION
JB	JB	JERSEY BARRIER
CB	CB	CATCH BASIN
		CATCH BASIN CURB INLET
FP	FP	FLAG POLE
GP	GP	GAS PUMP
MB	MB	MAIL BOX
		POST SQUARE
		POST CIRCULAR
WELL	WELL	WELL
EHH	EHH	ELECTRIC HANDHOLE
		FENCE GATE POST
GG	GG	GAS GATE
BHL #	BHL #	BORING HOLE
MW #	MW #	MONITORING WELL
TP #	TP #	TEST PIT
		HYDRANT
		LIGHT POLE
CO.BD.		COUNTY BOUND
		GPS POINT
		CABLE MANHOLE
		DRAINAGE MANHOLE
		ELECTRIC MANHOLE
		GAS MANHOLE
		MISC MANHOLE
		SEWER MANHOLE
		TELEPHONE MANHOLE
		WATER MANHOLE
MHB	MHB	MASSACHUSETTS HIGHWAY BOUND
MON		MONUMENT
SB		STONE BOUND
TB		TOWN OR CITY BOUND
		TRAVERSE OR TRIANGULATION STATION
TPL or GUY	TPL or GUY	TROLLEY POLE OR GUY POLE
UPL	UPL	UTILITY POLE
		BUSH
SIZE & TYPE		TREE
		STUMP
		SWAMP / MARSH
WG	WG	WATER GATE
		OVERHEAD CABLE/WIRE
		CURBING
99		CONTOURS (ON-THE-GROUND SURVEY DATA)
100 99		CONTOURS (PHOTOGRAMMETRIC DATA)
		UNDERGROUND DRAIN PIPE (DOUBLE LINE 24 INCH AND OVER)
		UNDERGROUND ELECTRIC DUCT (DOUBLE LINE 24 INCH AND OVER)
		UNDERGROUND GAS MAIN (DOUBLE LINE 24 INCH AND OVER)
		UNDERGROUND SEWER MAIN (DOUBLE LINE 24 INCH AND OVER)
		UNDERGROUND TELEPHONE DUCT (DOUBLE LINE 24 INCH AND OVER)
		UNDERGROUND WATER MAIN (DOUBLE LINE 24 INCH AND OVER)
		BALANCED STONE WALL
		GUARD RAIL - STEEL POSTS
		GUARD RAIL - WOOD POSTS
		CHAIN LINK OR METAL FENCE
		WOOD FENCE
		COMPOST FILTER TUBES
		TREE LINE
		SAWCUT LINE
		TOP OR BOTTOM OF SLOPE
		EDGE OF PAVEMENT
		LIMIT OF MICROMILLING AND OVERLAY
		BANK OF RIVER OR STREAM
		BORDER OF WETLAND
		100 FT WETLAND BUFFER
		200 FT RIVERFRONT BUFFER
		STATE HIGHWAY LAYOUT
		TOWN OR CITY LAYOUT
		COUNTY LAYOUT
		TOWN OR CITY BOUNDARY LINE
		PROPERTY LINE OR APPROXIMATE PROPERTY LINE
		EASEMENT

PAVEMENT MARKINGS SYMBOLS

EXISTING	PROPOSED	DESCRIPTION
	DBYL	DOUBLE YELLOW LINE

ABBREVIATIONS

GENERAL

AADT	ANNUAL AVERAGE DAILY TRAFFIC
ABAN	ABANDON
ADJ	ADJUST
APPROX.	APPROXIMATE
A.C.	ASPHALT CONCRETE
BIT.	BITUMINOUS
BC	BOTTOM OF CURB
BD.	BOUND
BL	BASELINE
BLDG	BUILDING
BM	BENCHMARK
BO	BY OTHERS
BOS	BOTTOM OF SLOPE
BR.	BRIDGE
CB	CATCH BASIN
CBCI	CATCH BASIN WITH CURB INLET
CC	CEMENT CONCRETE
CCM	CEMENT CONCRETE MASONRY
CEM	CEMENT
CI	CURB INLET
CIP	CAST IRON PIPE
CLF	CHAIN LINK FENCE
CL	CENTERLINE
CMP	CORRUGATED METAL PIPE
CSP	CORRUGATED STEEL PIPE
CO.	COUNTY
CONC	CONCRETE
CONT	CONTINUOUS
CONST	CONSTRUCTION
CTE	CONNECT TO EXISTING
CR GR	CROWN GRADE
DHV	DESIGN HOURLY VOLUME
DI	DROP INLET
DIA	DIAMETER
DIP	DUCTILE IRON PIPE
DWY	DRIVEWAY
ELEV (or EL.)	ELEVATION
EMB	EMBANKMENT
EOP	EDGE OF PAVEMENT
EXIST (or EX)	EXISTING
EXC	EXCAVATION
F&C	FRAME AND COVER
F&G	FRAME AND GRATE
FDN.	FOUNDATION
FLDSTN	FIELDSTONE
GAR	GARAGE
GD	GROUND
GG	GAS GATE
GI	GUTTER INLET
GRAN	GRANITE
GRD	GUARD
HDW	HEADWALL
HMA	HOT MIX ASPHALT
HOR	HORIZONTAL
HYD	HYDRANT
INV	INVERT
JCT	JUNCTION
L	LENGTH OF CURVE
LP	LIGHT POLE
LT	LEFT
MAX	MAXIMUM
MB	MAILBOX
MH	MANHOLE
MHB	MASSACHUSETTS HIGHWAY BOUND
MIN	MINIMUM
NIC	NOT IN CONTRACT
NO.	NUMBER
PC	POINT OF CURVATURE
PCC	POINT OF COMPOUND CURVATURE
P.G.L.	PROFILE GRADE LINE
PI	POINT OF INTERSECTION
POC	POINT ON CURVE
POT	POINT ON TANGENT
PRC	POINT OF REVERSE CURVATURE
PROJ	PROJECT
PROP	PROPOSED
PSB	PLANTABLE SOIL BORROW
PT	POINT OF TANGENCY
PVC	POINT OF VERTICAL CURVATURE
PVI	POINT OF VERTICAL INTERSECTION
PVT	POINT OF VERTICAL TANGENCY
PVMT	PAVEMENT

ABBREVIATIONS (cont.)

GENERAL

R	RADIUS OF CURVATURE
R&D	REMOVE AND DISPOSE
RCP	REINFORCED CONCRETE PIPE
RD	ROAD
RDWY	ROADWAY
REM	REMOVE
RET	RETAIN
RET WALL	RETAINING WALL
ROW	RIGHT OF WAY
RR	RAILROAD
R&R	REMOVE AND RESET
R&S	REMOVE AND STACK
RT	RIGHT
SB	STONE BOUND
SHLD	SHOULDER
SMH	SEWER MANHOLE
ST	STREET
STA	STATION
SSD	STOPPING SIGHT DISTANCE
SHLO	STATE HIGHWAY LAYOUT LINE
SW	SIDEWALK
T	TANGENT DISTANCE OF CURVE/TRUCK %
TAN	TANGENT
TEMP	TEMPORARY
TC	TOP OF CURB
TOS	TOP OF SLOPE
TYP	TYPICAL
UP	UTILITY POLE
VAR	VARIES
VERT	VERTICAL
VC	VERTICAL CURVE
WCR	WHEEL CHAIR RAMP
WG	WATER GATE
WIP	WROUGHT IRON PIPE
WM	WATER METER/WATER MAIN

COPYRIGHT 2016 WESTON & SAMPSON

Weston & Sampson
100 Foxborough Boulevard Suite 250
Foxborough, MA 02035
508.698.3034 800.SAMPSON
www.westonandsampson.com

No.	Date	Dr.By	Ck.By	App.By	Description
		A	P	R	O V E D

6.14.22
DATE
REGISTERED PROFESSIONAL ENGINEER

TOWN OF RAYNHAM, MASSACHUSETTS
DEPARTMENT OF PUBLIC WORKS

PROPOSED BRIDGE REPLACEMENT - BRIDGE NO. R-02-024
MILL STREET OVER PINE SWAMP BROOK

LEGEND, ABBREVIATIONS, AND GENERAL NOTES

CADD NO.	SCALE:	CONTRACT:	JOB NO.	DR.BY	DSN.BY	CHK.BY	APP.BY
-	AS SHOWN	-	2190328	GTS	GTS	AKP	LFK

C-1

FILE NO. -

P:\MA\Raynham MA\2190328-Mill Street Bridge Replacement\CAD\Mill-St_Cover.dwg

EXISTING CONDITIONS LEGEND

- EDGE OF WOODS
- DECIDUOUS TREE
- CONIFEROUS TREE
- SHRUB/BUSH
- UTILITY POLE
- LIGHT POLE
- HYDRANT
- WATER SHUTOFF
- GAS VALVE
- WATER VALVE
- MONUMENT
- IRON PIN / IRON ROD
- HANDICAP SPACE
- HAND HOLE
- ELEC. METER
- GAS METER
- PROPERTY LINE
- CROSS SECTION LINE
- MAJOR CONTOUR LINE
- MINOR CONTOUR LINE
- TOP OF BANK
- BOTTOM OF BANK
- METAL GUARDRAIL
- BREAKLINE
- MAILBOX
- STORM SEWER LINE
- SANITARY SEWER LINE
- WATER LINE
- GAS LINE
- SIGNAL WIRE LINE
- CABLE LINE
- FIBER OPTIC LINE
- LOW PRESSURE SEWER LINE
- ELECTRIC LINE
- OVERHEAD UTILITIES
- TELEPHONE LINE
- SANITARY MANHOLE (SMH)
- DRAINAGE MANHOLE (DMH)
- CATCHBASIN (CB)
- METAL POST/BOLLARD (BOL)
- ELECTRIC MANHOLE (MHE)
- UNKNOWN MANHOLE
- TELEPHONE MANHOLE (MHT)
- VENT PIPE
- COULD NOT OPEN
- FLOW DIRECTION
- MAGNETIC CONCRETE NAIL
- GROUND SHOT
- WETLAND FLAG (DELINEATED BY OTHERS)
- CENTERLINE
- EDGE OF PAVEMENT
- EDGE OF CONCRETE
- 50' DOWNSTREAM
- 50' UPSTREAM

SURVEY NOTES:

1. UNDERGROUND UTILITY LOCATIONS SHOWN HEREON ARE BASED ON UTILITY EVIDENCE VISIBLE AT GROUND SURFACE AND RECORD DRAWINGS AND ARE SUBJECT TO FIELD VERIFICATION BY EXCAVATION. UTILITIES SHOWN DO NOT PURPORT TO CONSTITUTE OR REPRESENT ALL UTILITIES LOCATED UPON OR ADJACENT TO THE SURVEYED PREMISES.
2. SURVEY PERFORMED BY WESTON & SAMPSON PE, LS, LA, PC. IN MARCH 2019.
3. CONTOURS AND ELEVATIONS SHOWN ON NAVD88 VERTICAL DATUM BASED ON GPS OBSERVATIONS.
4. NORTH ORIENTATION IS BASED ON GPS OBSERVATIONS TAKEN AT THE TIME OF THE FIELD SURVEY. MAPPING PREPARED ON NAD83 STATE PLANE COORDINATE SYSTEM–MASSACHUSETTS MAINLAND ZONE.
5. 211 MILL STREET, MAP #2000 A2 SITE SKETCH FOR WATER SERVICE CONNECTION, SUPPLIED BY TOWN OF RAYNHAM WATER DISTRICT.
6. RECORD UTILITY LOCATIONS SUPPLIED BY WESTON & SAMPSON ENGINEERS.
7. THE WETLAND FLAG LOCATIONS DEPICTED HEREON WERE PROVIDED BY THE SOIL SCIENTIST AND NOT THE RESULT OF AN ACTUAL FIELD SURVEY PERFORMED BY WESTON & SAMPSON PE, LS, LA, PC
8. SANITARY SEWER INFORMATION SOUTH SOUTH OF THE EXISTING PUMP HOUSE (213 MILL ST) IS BASED ON RECORD DRAWING FOR PHASE 7 SEWER SYSTEM EXPANSION CONTRACT NO. 2, PROVIDED BY TIGHE & BOND, DATED 11/2020

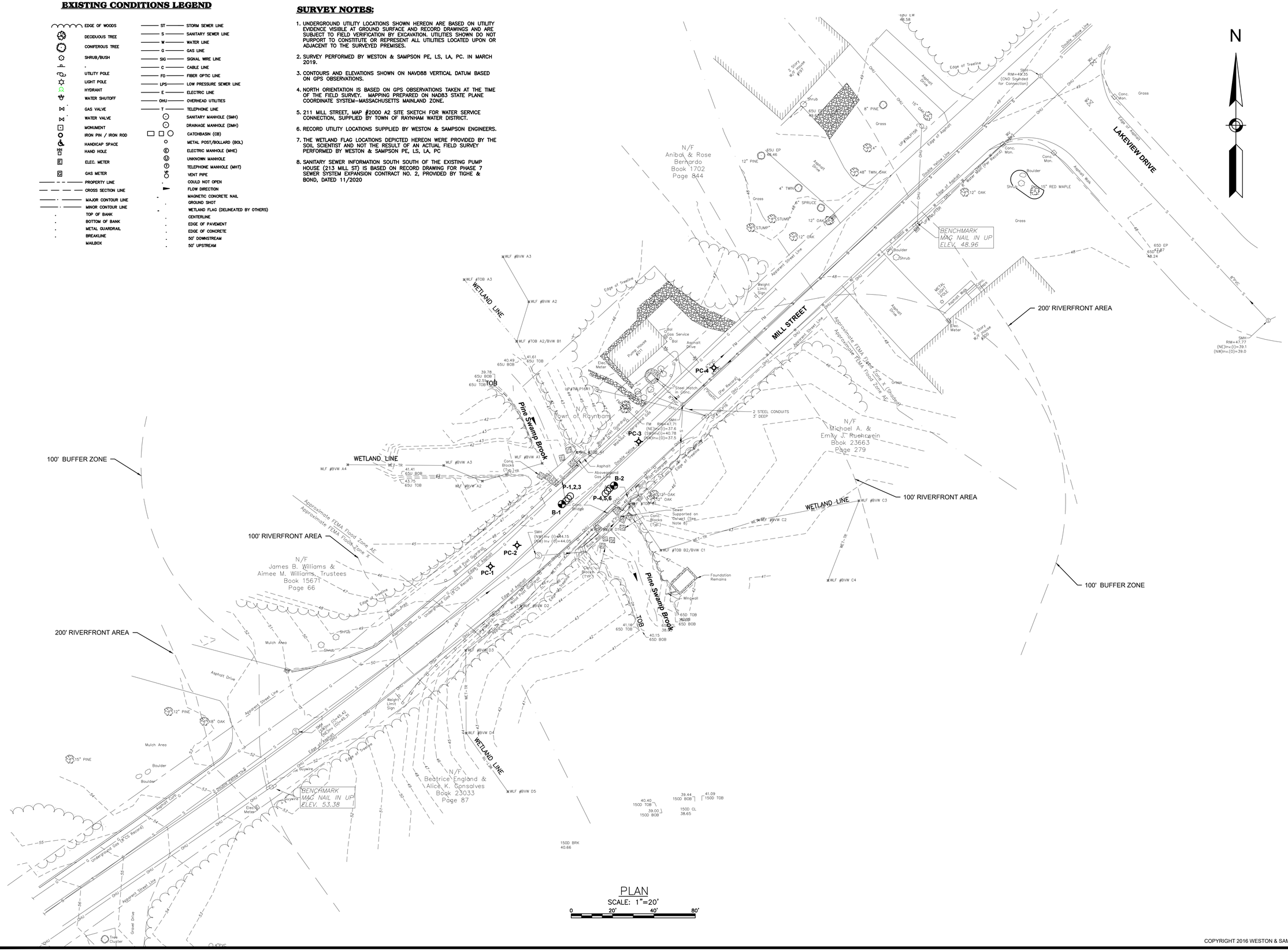

PLAN
SCALE: 1"=20'
0 20' 40' 80'

COPYRIGHT 2016 WESTON & SAMPSON

Weston & Sampson
273 Dividend Road, Rocky Hill, CT 06067
860.513.1473 800.SAMPSON
www.westonandsampson.com

No.	Date	Dr.By	Ck.By	App.By	Description	DATE

A P P R O V E D

REGISTERED PROFESSIONAL ENGINEER

TOWN OF RAYNHAM, MASSACHUSETTS
DEPARTMENT OF PUBLIC WORKS
MILL STREET BRIDGE REPLACEMENT

EXISTING CONDITIONS PLAN

CADD NO.	SCALE:	CONTRACT:	JOB NO.	DR.BY	DSN.BY	CHK.BY	APP.BY
-	AS SHOWN	-	2190328	LEC	LEC	LAS	ALN

C-2

FILE NO. -

SHEET 2 OF 12

P:\MA\Raynham MA\2190328-Mill Street Bridge Replacement\CAD\Mill-SL_Exist.dwg

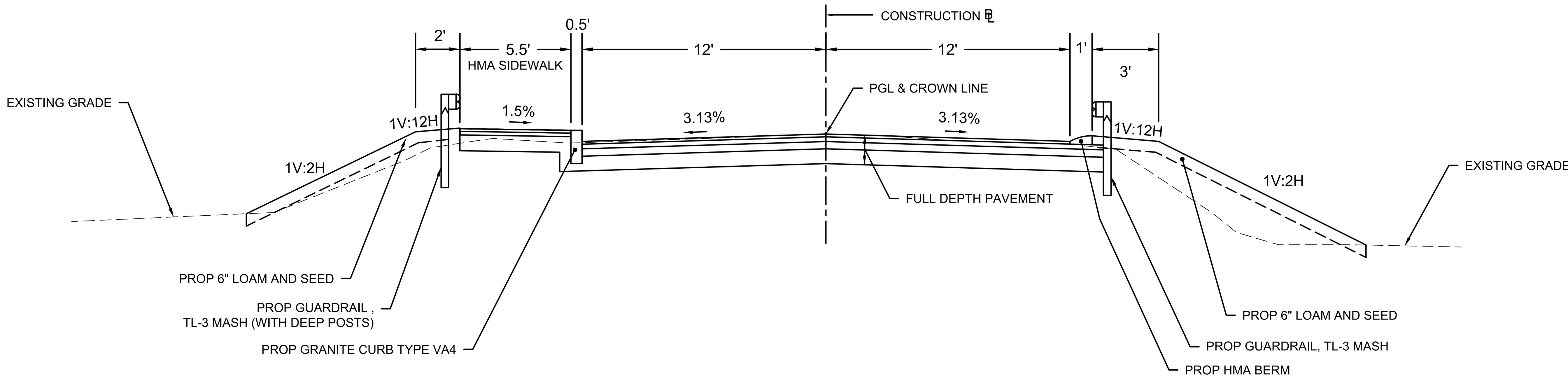

MILL STREET TYPICAL SECTION

STA 1+84 TO STA 3+03 & STA 3+53 TO STA 5+15.76
NTS

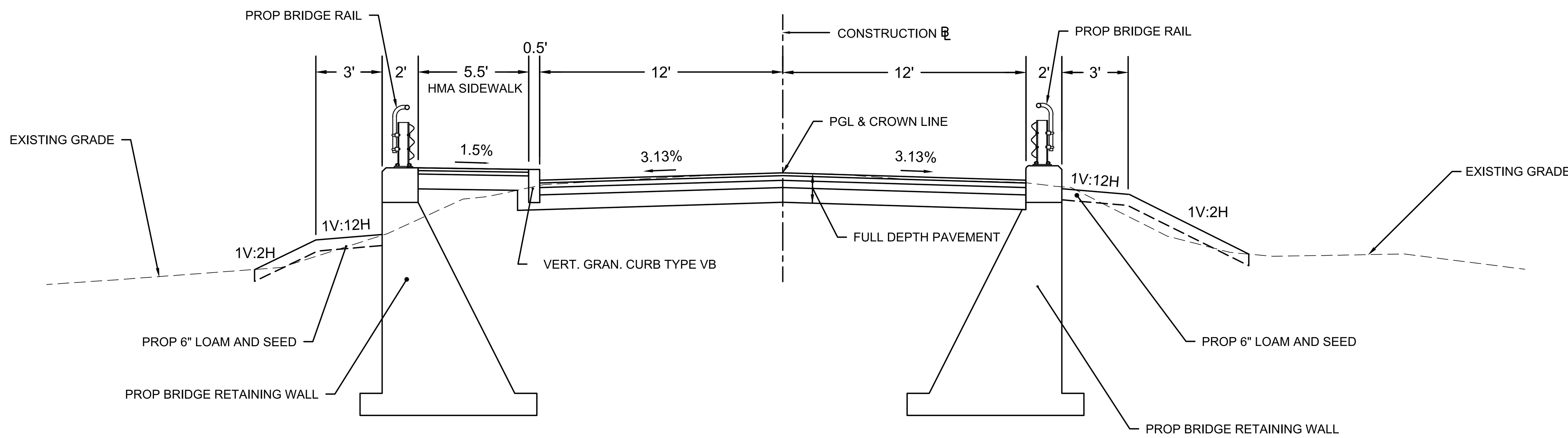

MILL STREET TYPICAL SECTION WITH RETAINING WALLS

STA 3+03 TO STA 3+53
NTS

PROPOSED FULL DEPTH PAVEMENT:

SURFACE COURSE:	1-½" SUPERPAVE SURFACE COURSE-12.5 (SSC-12.5) OVER ASPHALT EMULSION FOR TACK COAT
BASE COURSE:	2-½" SUPERPAVE INTERMEDIATE COURSE 19.0 (SIC-19.0) PLACED IN ONE LAYER
SUBBASE:	4" DENSE GRADED CRUSHED STONE OVER 8" GRAVEL BORROW, TYPE B
	BITUMEN FOR TACK COAT (RS-1) TO BE APPLIED AT 0.05 GAL/SY

PROPOSED HOT MIX ASPHALT DRIVEWAY OR HOT MIX ASPHALT WALK:

SURFACE COURSE:	1-½" SUPERPAVE SURFACE COURSE-12.5 (SSC-12.5) OVER ASPHALT EMULSION FOR TACK COAT 2" SUPERPAVE INTERMEDIATE COURSE 19.0 (SIC-19.0)
FOUNDATION:	8" GRAVEL BORROW, TYPE B

Weston & Sampson
100 Foxborough Boulevard Suite 250
Foxborough, MA 02035
508.698.3034 800.SAMPSON
www.westonandsampson.com

No.	Date	Dr.By	Ck.By	App.By	Description
		A	P	P	R O V E D

REGISTERED PROFESSIONAL ENGINEER — DATE 6.14.22

TOWN OF RAYNHAM, MASSACHUSETTS
DEPARTMENT OF PUBLIC WORKS
PROPOSED BRIDGE REPLACEMENT - BRIDGE NO. R-02-024
MILL STREET OVER PINE SWAMP BROOK

TYPICAL SECTIONS

SCALE:	CONTRACT:	JOB NO.	DR.BY	DSN.BY	CHK.BY	APP.BY
AS SHOWN	-	2190328	GTS	GTS	AKP	LFK

CADD NO. -
FILE NO. -

C-3

SHEET 3 OF 23

COPYRIGHT 2016 WESTON & SAMPSON

P:\MA\Raynham MA\2190328-Mill Street Bridge Replacement\CAD\Mill-St_Model.dwg

Weston & Sampson

BORING NUMBER: P-1

PAGE 1 OF 1

CLIENT: Town of Raynham
PROJECT NUMBER: 2190328
PROJECT: Mill Street Bridge Replacement
LOCATION: Raynham, MA
LOGGED BY: R. van der Heijden
CHECKED BY: S. Spink
CONTRACTOR: New England Boring Contractors
FOREMAN/DRILLER: Gary Twombly Jr.
DRILL RIG TYPE: CME-75 Truck Rig
OTHER EQUIPMENT:
DRILLING METHOD: n/a
CASING/AUGER SIZE: 2 in. Diameter Drill Rod
SAMPLING METHOD: n/a
SAMPLER HAMMER:
BORING LOCATION: See Site Plan
GROUND ELEV: 48 ft. +/- (NAVD88)
DATE STARTED: 5/30/2019
DATE COMPLETED: 5/30/2019

Depth Scale, ft. | Sample Type | Blows on Sampler/6" Blows on Casing/12" | N-Value, Blows/ft. | Sample Recovery, in. Sampler Penetration, in. | Strata Description and Graphic Log

Sample Description
General Format: Density/consistency, color, classification name (secondary PRIMARY, additional); moisture, additional information. [UNIT NAME and/or ORIGIN]
Soil Classification Name Guide based on Constituent Percentages

Mineral Soil	GRAVEL, SAND, SILT, CLAY	> 50%	PEAT	> 50%
	gravelly, sandy, silty, clayey	35 - 50%	organic (soil name)	15 - 50%
	some	20 - 35%	(soil name) with some organics	5 - 15%
	little	10 - 20%		
	trace	0 - 10%	trace organics	< 5%

Data Plots
Laboratory Test Data:
PL = Plastic Limit, %
MC= Moisture content, %
LL = Liquid Limit, %
In-Situ Test Data
SPT N-Value

Remarks and Additional Tests
WOR = Weight of rods
WOH = Weight of hammer
P200 = Percent passing the #200 sieve (laboratory value)
OC = Organic content, % (laboratory value)
Groundwater Observations
Date:
Depth: Not observed

Probe drive becomes more difficult from 9.5 ft. to 12.5 ft.

Probe terminated at 12.5 ft. without refusal.

END OF BORING LOG

SAMPLE LEGEND
Standard split spoon sampler driven w/ 140-lb. hammer (24" long, 2" OD, 1-3/8" ID)
Thin-walled tube sampler pushed w/ rig hydraulics (30" long, 3" ID)
NX rock core sampler advanced using rotary drilling methods (5' long, 3" ID)
Modified split spoon sampler driven w/ 140-lb. hammer (24" long, 3" OD, 2-3/8" ID)

N-VALUE RELATIONSHIPS

N-VALUE BLOWS/FT.	DENSITY OF GRANULAR SOILS	N-VALUE BLOWS/FT.	CONSISTENCY OF COHESIVE SOILS
0 - 4	Very Loose	< 2	Very Soft
4 - 10	Loose	2 - 4	Soft
10 - 30	Medium Dense	4 - 8	Medium Stiff
30 - 50	Dense	8 - 15	Stiff
> 50	Very Dense	15 - 30	Very Stiff
		> 30	Hard

GENERAL NOTES
1. The stratification lines represent the approximate boundary between soil types; actual transitions may be gradual.
2. Water level readings have been made in the drill holes at the times and conditions stated on the boring log. Fluctuations in the level of groundwater may occur due to other factors than those presented at the time measurements are made.

Weston & Sampson

BORING NUMBER: P-2

PAGE 1 OF 1

CLIENT: Town of Raynham
PROJECT NUMBER: 2190328
PROJECT: Mill Street Bridge Replacement
LOCATION: Raynham, MA
LOGGED BY: R. van der Heijden
CHECKED BY: S. Spink
CONTRACTOR: New England Boring Contractors
FOREMAN/DRILLER: Gary Twombly Jr.
DRILL RIG TYPE: CME-75 Truck Rig
OTHER EQUIPMENT:
DRILLING METHOD: n/a
CASING/AUGER SIZE: 2 in. Diameter Drill Rod
SAMPLING METHOD: n/a
SAMPLER HAMMER:
BORING LOCATION: See Site Plan
GROUND ELEV: 48 ft. +/- (NAVD88)
DATE STARTED: 5/30/2019
DATE COMPLETED: 5/30/2019

Depth Scale, ft. | Sample Type | Blows on Sampler/6" Blows on Casing/12" | N-Value, Blows/ft. | Sample Recovery, in. Sampler Penetration, in. | Strata Description and Graphic Log

Sample Description
General Format: Density/consistency, color, classification name (secondary PRIMARY, additional); moisture, additional information. [UNIT NAME and/or ORIGIN]
Soil Classification Name Guide based on Constituent Percentages

Mineral Soil	GRAVEL, SAND, SILT, CLAY	> 50%	PEAT	> 50%
	gravelly, sandy, silty, clayey	35 - 50%	organic (soil name)	15 - 50%
	some	20 - 35%	(soil name) with some organics	5 - 15%
	little	10 - 20%		
	trace	0 - 10%	trace organics	< 5%

Data Plots
Laboratory Test Data:
PL = Plastic Limit, %
MC= Moisture content, %
LL = Liquid Limit, %
In-Situ Test Data
SPT N-Value

Remarks and Additional Tests
WOR = Weight of rods
WOH = Weight of hammer
P200 = Percent passing the #200 sieve (laboratory value)
OC = Organic content, % (laboratory value)
Groundwater Observations
Date:
Depth: Not observed

Refusal at depth of 14" on possible concrete abutment.

END OF BORING LOG

SAMPLE LEGEND
Standard split spoon sampler driven w/ 140-lb. hammer (24" long, 2" OD, 1-3/8" ID)
Thin-walled tube sampler pushed w/ rig hydraulics (30" long, 3" ID)
NX rock core sampler advanced using rotary drilling methods (5' long, 3" ID)
Modified split spoon sampler driven w/ 140-lb. hammer (24" long, 3" OD, 2-3/8" ID)

N-VALUE RELATIONSHIPS

N-VALUE BLOWS/FT.	DENSITY OF GRANULAR SOILS	N-VALUE BLOWS/FT.	CONSISTENCY OF COHESIVE SOILS
0 - 4	Very Loose	< 2	Very Soft
4 - 10	Loose	2 - 4	Soft
10 - 30	Medium Dense	4 - 8	Medium Stiff
30 - 50	Dense	8 - 15	Stiff
> 50	Very Dense	15 - 30	Very Stiff
		> 30	Hard

GENERAL NOTES
1. The stratification lines represent the approximate boundary between soil types; actual transitions may be gradual.
2. Water level readings have been made in the drill holes at the times and conditions stated on the boring log. Fluctuations in the level of groundwater may occur due to other factors than those presented at the time measurements are made.

Weston & Sampson

BORING NUMBER: P-3

PAGE 1 OF 1

CLIENT: Town of Raynham
PROJECT NUMBER: 2190328
PROJECT: Mill Street Bridge Replacement
LOCATION: Raynham, MA
LOGGED BY: R. van der Heijden
CHECKED BY: S. Spink
CONTRACTOR: New England Boring Contractors
FOREMAN/DRILLER: Gary Twombly Jr.
DRILL RIG TYPE: CME-75 Truck Rig
OTHER EQUIPMENT:
DRILLING METHOD: n/a
CASING/AUGER SIZE: 2 in. Diameter Drill Rod
SAMPLING METHOD: n/a
SAMPLER HAMMER:
BORING LOCATION: See Site Plan
GROUND ELEV: 48 ft. +/- (NAVD88)
DATE STARTED: 5/30/2019
DATE COMPLETED: 5/30/2019

Depth Scale, ft. | Sample Type | Blows on Sampler/6" Blows on Casing/12" | N-Value, Blows/ft. | Sample Recovery, in. Sampler Penetration, in. | Strata Description and Graphic Log

Sample Description
General Format: Density/consistency, color, classification name (secondary PRIMARY, additional); moisture, additional information. [UNIT NAME and/or ORIGIN]
Soil Classification Name Guide based on Constituent Percentages

Mineral Soil	GRAVEL, SAND, SILT, CLAY	> 50%	PEAT	> 50%
	gravelly, sandy, silty, clayey	35 - 50%	organic (soil name)	15 - 50%
	some	20 - 35%	(soil name) with some organics	5 - 15%
	little	10 - 20%		
	trace	0 - 10%	trace organics	< 5%

Data Plots
Laboratory Test Data:
PL = Plastic Limit, %
MC= Moisture content, %
LL = Liquid Limit, %
In-Situ Test Data
SPT N-Value

Remarks and Additional Tests
WOR = Weight of rods
WOH = Weight of hammer
P200 = Percent passing the #200 sieve (laboratory value)
OC = Organic content, % (laboratory value)
Groundwater Observations
Date:
Depth: Not observed

Refusal at depth of 14" on possible concrete abutment.

END OF BORING LOG

SAMPLE LEGEND
Standard split spoon sampler driven w/ 140-lb. hammer (24" long, 2" OD, 1-3/8" ID)
Thin-walled tube sampler pushed w/ rig hydraulics (30" long, 3" ID)
NX rock core sampler advanced using rotary drilling methods (5' long, 3" ID)
Modified split spoon sampler driven w/ 140-lb. hammer (24" long, 3" OD, 2-3/8" ID)

N-VALUE RELATIONSHIPS

N-VALUE BLOWS/FT.	DENSITY OF GRANULAR SOILS	N-VALUE BLOWS/FT.	CONSISTENCY OF COHESIVE SOILS
0 - 4	Very Loose	< 2	Very Soft
4 - 10	Loose	2 - 4	Soft
10 - 30	Medium Dense	4 - 8	Medium Stiff
30 - 50	Dense	8 - 15	Stiff
> 50	Very Dense	15 - 30	Very Stiff
		> 30	Hard

GENERAL NOTES
1. The stratification lines represent the approximate boundary between soil types; actual transitions may be gradual.
2. Water level readings have been made in the drill holes at the times and conditions stated on the boring log. Fluctuations in the level of groundwater may occur due to other factors than those presented at the time measurements are made.

Weston & Sampson

BORING NUMBER: P-4

PAGE 1 OF 1

CLIENT: Town of Raynham
PROJECT NUMBER: 2190328
PROJECT: Mill Street Bridge Replacement
LOCATION: Raynham, MA
LOGGED BY: R. van der Heijden
CHECKED BY: S. Spink
CONTRACTOR: New England Boring Contractors
FOREMAN/DRILLER: Gary Twombly Jr.
DRILL RIG TYPE: CME-75 Truck Rig
OTHER EQUIPMENT:
DRILLING METHOD: n/a
CASING/AUGER SIZE: 2 in. Diameter Drill Rod
SAMPLING METHOD: n/a
SAMPLER HAMMER:
BORING LOCATION: See Site Plan
GROUND ELEV: 46 ft. +/- (NAVD88)
DATE STARTED: 5/31/2019
DATE COMPLETED: 5/31/2019

Depth Scale, ft. | Sample Type | Blows on Sampler/6" Blows on Casing/12" | N-Value, Blows/ft. | Sample Recovery, in. Sampler Penetration, in. | Strata Description and Graphic Log

Sample Description
General Format: Density/consistency, color, classification name (secondary PRIMARY, additional); moisture, additional information. [UNIT NAME and/or ORIGIN]
Soil Classification Name Guide based on Constituent Percentages

Mineral Soil	GRAVEL, SAND, SILT, CLAY	> 50%	PEAT	> 50%
	gravelly, sandy, silty, clayey	35 - 50%	organic (soil name)	15 - 50%
	some	20 - 35%	(soil name) with some organics	5 - 15%
	little	10 - 20%		
	trace	0 - 10%	trace organics	< 5%

Data Plots
Laboratory Test Data:
PL = Plastic Limit, %
MC= Moisture content, %
LL = Liquid Limit, %
In-Situ Test Data
SPT N-Value

Remarks and Additional Tests
WOR = Weight of rods
WOH = Weight of hammer
P200 = Percent passing the #200 sieve (laboratory value)
OC = Organic content, % (laboratory value)
Groundwater Observations
Date:
Depth: Not observed

Possible cobble encountered at depth of 4 ft.

Refusal at 5 ft. on possible boulder.

END OF BORING LOG

SAMPLE LEGEND
Standard split spoon sampler driven w/ 140-lb. hammer (24" long, 2" OD, 1-3/8" ID)
Thin-walled tube sampler pushed w/ rig hydraulics (30" long, 3" ID)
NX rock core sampler advanced using rotary drilling methods (5' long, 3" ID)
Modified split spoon sampler driven w/ 140-lb. hammer (24" long, 3" OD, 2-3/8" ID)

N-VALUE RELATIONSHIPS

N-VALUE BLOWS/FT.	DENSITY OF GRANULAR SOILS	N-VALUE BLOWS/FT.	CONSISTENCY OF COHESIVE SOILS
0 - 4	Very Loose	< 2	Very Soft
4 - 10	Loose	2 - 4	Soft
10 - 30	Medium Dense	4 - 8	Medium Stiff
30 - 50	Dense	8 - 15	Stiff
> 50	Very Dense	15 - 30	Very Stiff
		> 30	Hard

GENERAL NOTES
1. The stratification lines represent the approximate boundary between soil types; actual transitions may be gradual.
2. Water level readings have been made in the drill holes at the times and conditions stated on the boring log. Fluctuations in the level of groundwater may occur due to other factors than those presented at the time measurements are made.

Weston & Sampson

BORING NUMBER: P-5

PAGE 1 OF 1

CLIENT: Town of Raynham
PROJECT NUMBER: 2190328
PROJECT: Mill Street Bridge Replacement
LOCATION: Raynham, MA
LOGGED BY: R. van der Heijden
CHECKED BY: S. Spink
CONTRACTOR: New England Boring Contractors
FOREMAN/DRILLER: Gary Twombly Jr.
DRILL RIG TYPE: CME-75 Truck Rig
OTHER EQUIPMENT:
DRILLING METHOD: n/a
CASING/AUGER SIZE: 2 in. Diameter Drill Rod
SAMPLING METHOD: n/a
SAMPLER HAMMER:
BORING LOCATION: See Site Plan
GROUND ELEV: 46 ft. +/- (NAVD88)
DATE STARTED: 5/31/2019
DATE COMPLETED: 5/31/2019

Depth Scale, ft. | Sample Type | Blows on Sampler/6" Blows on Casing/12" | N-Value, Blows/ft. | Sample Recovery, in. Sampler Penetration, in. | Strata Description and Graphic Log

Sample Description
General Format: Density/consistency, color, classification name (secondary PRIMARY, additional); moisture, additional information. [UNIT NAME and/or ORIGIN]
Soil Classification Name Guide based on Constituent Percentages

Mineral Soil	GRAVEL, SAND, SILT, CLAY	> 50%	PEAT	> 50%
	gravelly, sandy, silty, clayey	35 - 50%	organic (soil name)	15 - 50%
	some	20 - 35%	(soil name) with some organics	5 - 15%
	little	10 - 20%		
	trace	0 - 10%	trace organics	< 5%

Data Plots
Laboratory Test Data:
PL = Plastic Limit, %
MC= Moisture content, %
LL = Liquid Limit, %
In-Situ Test Data
SPT N-Value

Remarks and Additional Tests
WOR = Weight of rods
WOH = Weight of hammer
P200 = Percent passing the #200 sieve (laboratory value)
OC = Organic content, % (laboratory value)
Groundwater Observations
Date:
Depth: Not observed

Probe drive becomes more difficult from 8.5 ft. to 10.5 ft.

Probe terminated at 10.5 ft. without refusal.

END OF BORING LOG

SAMPLE LEGEND
Standard split spoon sampler driven w/ 140-lb. hammer (24" long, 2" OD, 1-3/8" ID)
Thin-walled tube sampler pushed w/ rig hydraulics (30" long, 3" ID)
NX rock core sampler advanced using rotary drilling methods (5' long, 3" ID)
Modified split spoon sampler driven w/ 140-lb. hammer (24" long, 3" OD, 2-3/8" ID)

N-VALUE RELATIONSHIPS

N-VALUE BLOWS/FT.	DENSITY OF GRANULAR SOILS	N-VALUE BLOWS/FT.	CONSISTENCY OF COHESIVE SOILS
0 - 4	Very Loose	< 2	Very Soft
4 - 10	Loose	2 - 4	Soft
10 - 30	Medium Dense	4 - 8	Medium Stiff
30 - 50	Dense	8 - 15	Stiff
> 50	Very Dense	15 - 30	Very Stiff
		> 30	Hard

GENERAL NOTES
1. The stratification lines represent the approximate boundary between soil types; actual transitions may be gradual.
2. Water level readings have been made in the drill holes at the times and conditions stated on the boring log. Fluctuations in the level of groundwater may occur due to other factors than those presented at the time measurements are made.

Weston & Sampson

BORING NUMBER: P-6

PAGE 1 OF 1

CLIENT: Town of Raynham
PROJECT NUMBER: 2190328
PROJECT: Mill Street Bridge Replacement
LOCATION: Raynham, MA
LOGGED BY: R. van der Heijden
CHECKED BY: S. Spink
CONTRACTOR: New England Boring Contractors
FOREMAN/DRILLER: Gary Twombly Jr.
DRILL RIG TYPE: CME-75 Truck Rig
OTHER EQUIPMENT:
DRILLING METHOD: n/a
CASING/AUGER SIZE: 2 in. Diameter Drill Rod
SAMPLING METHOD: n/a
SAMPLER HAMMER:
BORING LOCATION: See Site Plan
GROUND ELEV: 46 ft. +/- (NAVD88)
DATE STARTED: 5/31/2019
DATE COMPLETED: 5/31/2019

Depth Scale, ft. | Sample Type | Blows on Sampler/6" Blows on Casing/12" | N-Value, Blows/ft. | Sample Recovery, in. Sampler Penetration, in. | Strata Description and Graphic Log

Sample Description
General Format: Density/consistency, color, classification name (secondary PRIMARY, additional); moisture, additional information. [UNIT NAME and/or ORIGIN]
Soil Classification Name Guide based on Constituent Percentages

Mineral Soil	GRAVEL, SAND, SILT, CLAY	> 50%	PEAT	> 50%
	gravelly, sandy, silty, clayey	35 - 50%	organic (soil name)	15 - 50%
	some	20 - 35%	(soil name) with some organics	5 - 15%
	little	10 - 20%		
	trace	0 - 10%	trace organics	< 5%

Data Plots
Laboratory Test Data:
PL = Plastic Limit, %
MC= Moisture content, %
LL = Liquid Limit, %
In-Situ Test Data
SPT N-Value

Remarks and Additional Tests
WOR = Weight of rods
WOH = Weight of hammer
P200 = Percent passing the #200 sieve (laboratory value)
OC = Organic content, % (laboratory value)
Groundwater Observations
Date:
Depth: Not observed

Probe drive becomes more difficult from 8.5 ft. to 10.5 ft.

Probe terminated at 10.5 ft. without refusal.

END OF BORING LOG

SAMPLE LEGEND
Standard split spoon sampler driven w/ 140-lb. hammer (24" long, 2" OD, 1-3/8" ID)
Thin-walled tube sampler pushed w/ rig hydraulics (30" long, 3" ID)
NX rock core sampler advanced using rotary drilling methods (5' long, 3" ID)
Modified split spoon sampler driven w/ 140-lb. hammer (24" long, 3" OD, 2-3/8" ID)

N-VALUE RELATIONSHIPS

N-VALUE BLOWS/FT.	DENSITY OF GRANULAR SOILS	N-VALUE BLOWS/FT.	CONSISTENCY OF COHESIVE SOILS
0 - 4	Very Loose	< 2	Very Soft
4 - 10	Loose	2 - 4	Soft
10 - 30	Medium Dense	4 - 8	Medium Stiff
30 - 50	Dense	8 - 15	Stiff
> 50	Very Dense	15 - 30	Very Stiff
		> 30	Hard

GENERAL NOTES
1. The stratification lines represent the approximate boundary between soil types; actual transitions may be gradual.
2. Water level readings have been made in the drill holes at the times and conditions stated on the boring log. Fluctuations in the level of groundwater may occur due to other factors than those presented at the time measurements are made.

COPYRIGHT 2016 WESTON & SAMPSON

P:\MA\Raynham MA\2190328-Mill Street Bridge Replacement\CAD\Mill-SL_Model.dwg

Weston & Sampson
100 Foxborough Boulevard Suite 250
Foxborough, MA 02035 800.SAMPSON
508.698.3034 www.westonandsampson.com

No.	Date	Dr.By	Ck.By	App.By	Description
		A P P R O V E D			

6.14.22
REGISTERED PROFESSIONAL ENGINEER
DATE

COMMONWEALTH OF MASSACHUSETTS LAURENCE F. KEEGAN JR. NO. 33708 REGISTERED PROFESSIONAL ENGINEER

TOWN OF RAYNHAM, MASSACHUSETTS
DEPARTMENT OF PUBLIC WORKS
PROPOSED BRIDGE REPLACEMENT - BRIDGE NO. R-02-024
MILL STREET OVER PINE SWAMP BROOK
BORING LOGS

SCALE:	CONTRACT:	JOB NO.	DR BY	DSN BY	CHK BY	APP BY
AS SHOWN	-	2190328	GTS	GTS	AKP	LFK

FILE NO. -

C-4

SHEET 4 OF 23

BORING NUMBER: BB-1
PAGE 1 OF 2

Weston & Sampson

CLIENT: Town of Raynham
PROJECT NUMBER: 2190328
PROJECT: Mill Street Bridge Replacement
LOCATION: Raynham, MA
LOGGED BY: R. van der Heijden
CHECKED BY: S. Spink
CONTRACTOR: New England Boring Contractors
FOREMAN/DRILLER: Gary Twombly Jr.
DRILL RIG TYPE: CME-75 Truck Rig
OTHER EQUIPMENT:
DRILLING METHOD: Drive and Wash (Casing)
CASING/AUGER SIZE: 4 in. ID (HW)
SAMPLING METHOD: Standard Penetration Test (SPT)
SAMPLER HAMMER: 140 lb. Automatic Hammer
BORING LOCATION: See Site Plan
GROUND ELEV: 48 ft. +/- (NAVD88)
DATE STARTED: 5/30/2019
DATE COMPLETED: 5/30/2019

Sample Description
General Format: Density/consistency, color, classification name (secondary PRIMARY, additional); moisture, additional information. [UNIT NAME and/or ORIGIN]

Soil Classification Name Guide based on Constituent Percentages

Mineral Soil		Organic Soils	
GRAVEL, SAND, SILT, CLAY	> 50%	PEAT	> 50%
gravelly, sandy, silty, clayey	35 - 50%	organic (soil name)	15 - 50%
some	20 - 35%	(soil name) with some organics	5 - 15%
little	10 - 20%		
trace	0 - 10%	trace organics	< 5%

Data Plots
Laboratory Test Data:
PL = Plastic Limit, %
MC = Moisture content, %
LL = Liquid Limit, %
In-Situ Test Data: SPT N-Value (10 20 30 40)

Remarks and Additional Tests
WOR = Weight of rods
WOH = Weight of hammer
P200 = Percent passing the #200 sieve (laborator value)
OC = Organic content, % (laboratory value)

Groundwater Observations
Date: 5/30/2019
Depth: 8 ft. +/-

Depth Scale, ft.	Sample Type	Blows on Sampler/6" *Blows on Casing/12"*	N-Value, Blows/ft.	Sample Recovery, in. / Sampler Penetration, in.	Strata Description and Graphic Log	Sample Description	Remarks and Additional Tests
0-2	Split spoon	72, 19, 20, 12	39	11/24	FILL	6" Asphalt concrete. Dense, brown, fine to coarse SAND, little gravel, trace silt; moist. [FILL]	
2-4	Split spoon	8, 5, 5, 8	10	7/24	FILL	Medium dense, brown, fine to coarse SAND, little gravel, little silt; moist. [FILL]	
4-6	Split spoon	12, 6, 3, 2	9	6/24	FILL	Loose, brown, fine to coarse SAND, some silt, little gravel. [FILL]	
6-8	Split spoon	1, 2, 3, 4	5	4/24	FILL	Loose, brown, fine to coarse SAND, some gravel, little silt. [FILL]	
8-10	Split spoon	18, 12, 26, 32	38	11/24	GLACIAL TILL	Dense, gray, fine to coarse SAND, some gravel, little silt.	
10-12	Split spoon	34, 32, 33, 28	65	19/24	GLACIAL TILL	Very dense, gray, fine to coarse SAND, some gravel, little silt.	
13-15	Split spoon	15, 13, 14, 15	27	11/24	GLACIAL TILL	Medium dense, gray, fine to coarse SAND, little gravel, little silt, with occasional oxidation / staining.	
18	Split spoon	100/4"	-	1/4	GLACIAL TILL	Rock fragments from possible cobble / boulder in tip of spoon.	Advanced roller bit through possible boulder 18.5 to 19.5 ft.
23-25	Split spoon	41, 54, 92, 73	146	10/24	GLACIAL TILL	Very dense, gray, fine to coarse sandy GRAVEL, little silt.	

LOG CONTINUED ON NEXT PAGE

SAMPLE LEGEND
- Standard split spoon sampler driven w/ 140-lb. hammer (24" long, 2" OD, 1-3/8" ID)
- Thin-walled tube sampler pushed w/ rig hydraulics (30" long, 3" ID)
- NX rock core sampler advanced using rotary drilling methods (5' long, 3" ID)
- Modified split spoon sampler driven w/ 140-lb. hammer (24" long, 3" OD, 2-3/8" ID)

N-VALUE RELATIONSHIPS

N-VALUE BLOWS/FT.	DENSITY OF GRANULAR SOILS	N-VALUE BLOWS/FT.	CONSISTENCY OF COHESIVE SOILS
0 - 4	Very Loose	< 2	Very Soft
4 - 10	Loose	2 - 4	Soft
10 - 30	Medium Dense	4 - 8	Medium Stiff
30 - 50	Dense	8 - 15	Stiff
> 50	Very Dense	15 - 30	Very Stiff
		> 30	Hard

GENERAL NOTES
1. The stratification lines represent the approximate boundary between soil types; actual transitions may be gradual.
2. Water level readings have been made in the drill holes at the times and conditions stated on the boring log. Fluctuations in the level of groundwater may occur due to other factors than those presented at the time measurements are made.

BORING NUMBER: BB-1
PAGE 2 OF 2

CLIENT: Town of Raynham **PROJECT NUMBER:** 2190328 **PROJECT:** Mill Street Bridge Replacement **LOCATION:** Raynham, MA **LOGGED BY:** R. van der Heijden **CHECKED BY:** S. Spink **CONTRACTOR:** New England Boring Contractors **FOREMAN/DRILLER:** Gary Twombly Jr. **DRILL RIG TYPE:** CME-75 Truck Rig **OTHER EQUIPMENT:** **DRILLING METHOD:** Drive and Wash (Casing) **CASING/AUGER SIZE:** 4 in. ID (HW) **SAMPLING METHOD:** Standard Penetration Test (SPT) **SAMPLER HAMMER:** 140 lb. Automatic Hammer **BORING LOCATION:** See Site Plan **GROUND ELEV:** 48 ft. +/- (NAVD88) **DATE STARTED:** 5/30/2019 **DATE COMPLETED:** 5/30/2019

Groundwater Observations Date: 5/30/2019 Depth: 8 ft. +/-

Depth Scale, ft.	Sample Type	Blows on Sampler/6" *Blows on Casing/12"*	N-Value, Blows/ft.	Sample Recovery, in. / Sampler Penetration, in.	Strata Description and Graphic Log	Sample Description	Remarks and Additional Tests
28	Split spoon	100/3"	-	0/3	GLACIAL TILL	NO RECOVERY.	Advanced roller bit through possible boulder 28 to 29.5 ft.
33	Split spoon	100/3"	-	2/3	GLACIAL TILL	Gray, fine to coarse SAND, some gravel, some silt.	Advanced roller bit through possible weathered rock from 33 to 36.5 ft.

End of boring at 36.5 ft.

Boring backfilled with mixture of soil cuttings, bentonite chips, and Portland cement.

END OF BORING LOG

BORING NUMBER: BB-2
PAGE 1 OF 2

CLIENT: Town of Raynham
PROJECT NUMBER: 2190328
PROJECT: Mill Street Bridge Replacement
LOCATION: Raynham, MA
LOGGED BY: R. van der Heijden
CHECKED BY: S. Spink
CONTRACTOR: New England Boring Contractors
FOREMAN/DRILLER: Gary Twombly Jr.
DRILL RIG TYPE: CME-75 Truck Rig
OTHER EQUIPMENT:
DRILLING METHOD: Drive and Wash (Casing)
CASING/AUGER SIZE: 4 in. ID (HW)
SAMPLING METHOD: Standard Penetration Test (SPT)
SAMPLER HAMMER: 140 lb. Automatic Hammer
BORING LOCATION: See Site Plan
GROUND ELEV: 46 ft. +/- (NAVD88)
DATE STARTED: 5/31/2019
DATE COMPLETED: 5/31/2019

Groundwater Observations Date: 5/31/2019 Depth: 8 ft. +/-

Depth Scale, ft.	Sample Type	Blows on Sampler/6" *Blows on Casing/12"*	N-Value, Blows/ft.	Sample Recovery, in. / Sampler Penetration, in.	Strata Description and Graphic Log	Sample Description	Remarks and Additional Tests
0-2	Split spoon	66, 15, 11, 8	26	17/24	FILL	4" Asphalt concrete. Medium dense, brown, fine to coarse SAND, little gravel, trace silt; moist. [FILL]	
2-4	Split spoon	8, 5, 6, 6	11	12/24	FILL	Medium dense, brown, fine to coarse SAND, trace gravel, trace silt; moist. [FILL]	
4-6	Split spoon	6, 4, 5, 6	9	11/24	FILL	Loose, brown, fine to coarse SAND, little silt, trace gravel. [FILL]	
6-8	Split spoon	7, 7, 7, 7	14	11/24	SAND	Medium dense, gray-brown, fine to coarse SAND, little silt, trace gravel.	
8-10	Split spoon	14, 9, 18, 22	27	13/24	GLACIAL TILL	Medium dense, gray, fine to coarse SAND, some silt, trace gravel, with 2" wood at top of sample.	
13-15	Split spoon	19, 12, 12, 11	24	16/24	GLACIAL TILL	Medium dense, gray, fine to coarse SAND, little gravel, little silt.	
18-20	Split spoon	23, 24, 29, 34	53	13/24	GLACIAL TILL	Very dense, gray, fine to coarse SAND, some gravel, little silt.	
23-25	Split spoon	24, 24, 22, 25	46	12/24	GLACIAL TILL	Dense, gray, gravelly fine to coarse SAND, little silt.	

LOG CONTINUED ON NEXT PAGE

BORING NUMBER: BB-2
PAGE 2 OF 2

Groundwater Observations Date: 5/31/2019 Depth: 8 ft. +/-

Depth Scale, ft.	Sample Type	Blows on Sampler/6" *Blows on Casing/12"*	N-Value, Blows/ft.	Sample Recovery, in. / Sampler Penetration, in.	Strata Description and Graphic Log	Sample Description	Remarks and Additional Tests
28	Split spoon	100/1"	-	1/1	GLACIAL TILL	Gray, possible weathered rock sampled as: gravelly fine to coarse SAND, some silt.	Difficult to advance roller bit below 30 ft.
33	Split spoon	100/0"	-	0/0	GLACIAL TILL	NO RECOVERY.	Advanced roller bit through possible weathered rock from 33 to 35 ft.

End of boring at 35 ft. due to roller bit refusal.

Boring backfilled with mixture of soil cuttings, bentonite chips, and Portland cement.

END OF BORING LOG

Weston & Sampson
100 Foxborough Boulevard Suite 250
Foxborough, MA 02035
508.698.3034 800.SAMPSON
www.westonandsampson.com

No.	Date	Dr.By	Ck.By	App.By	Description

APPROVED
6.14.22
REGISTERED PROFESSIONAL ENGINEER DATE

COMMONWEALTH OF MASSACHUSETTS — LAURENCE F. KEEGAN, JR. CIVIL NO. 33708 — REGISTERED PROFESSIONAL ENGINEER

TOWN OF RAYNHAM, MASSACHUSETTS
DEPARTMENT OF PUBLIC WORKS

PROPOSED BRIDGE REPLACEMENT - BRIDGE NO. R-02-024
MILL STREET OVER PINE SWAMP BROOK

BORING LOGS

CADD NO.	SCALE:	CONTRACT:	JOB NO.	DR.BY	DSN.BY	CHK.BY	APP.BY
-	AS SHOWN	-	2190328	GTS	GTS	AKP	LFK

FILE NO. -

C-5

SHEET 5 OF 23

COPYRIGHT 2016 WESTON & SAMPSON

P:\MA\Raynham MA\2190328-Mill Street Bridge Replacement\CAD\Mill-St_Model.dwg

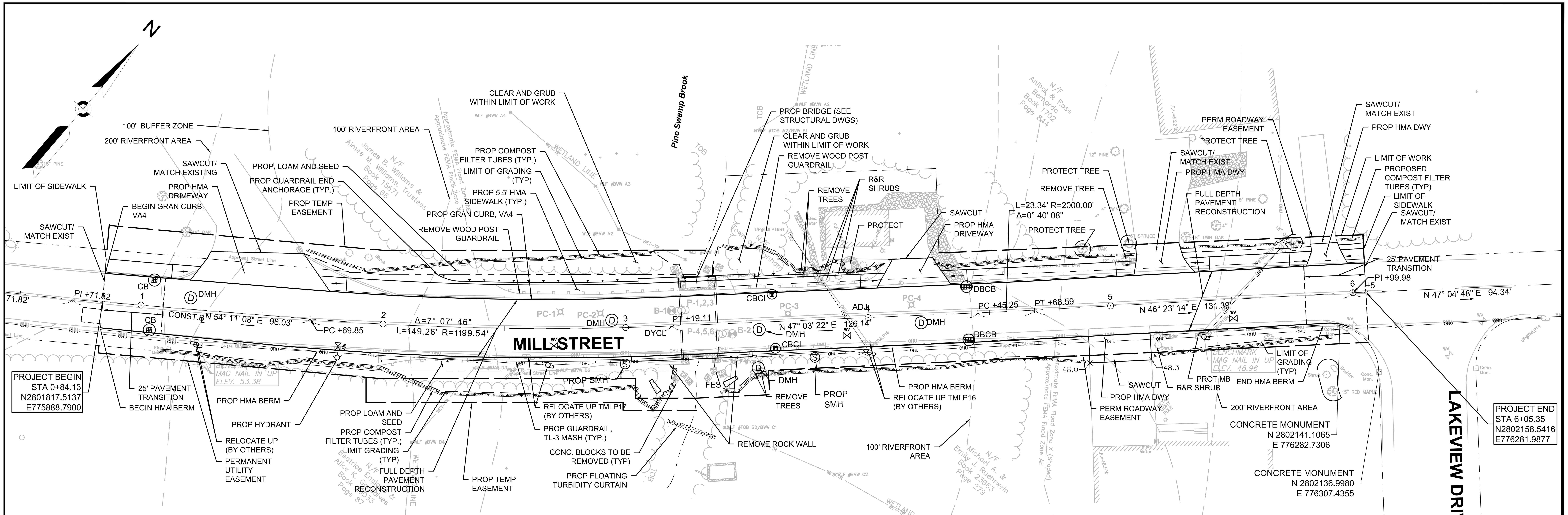

PLAN
SCALE: 1"=20'
0 20' 40' 80'

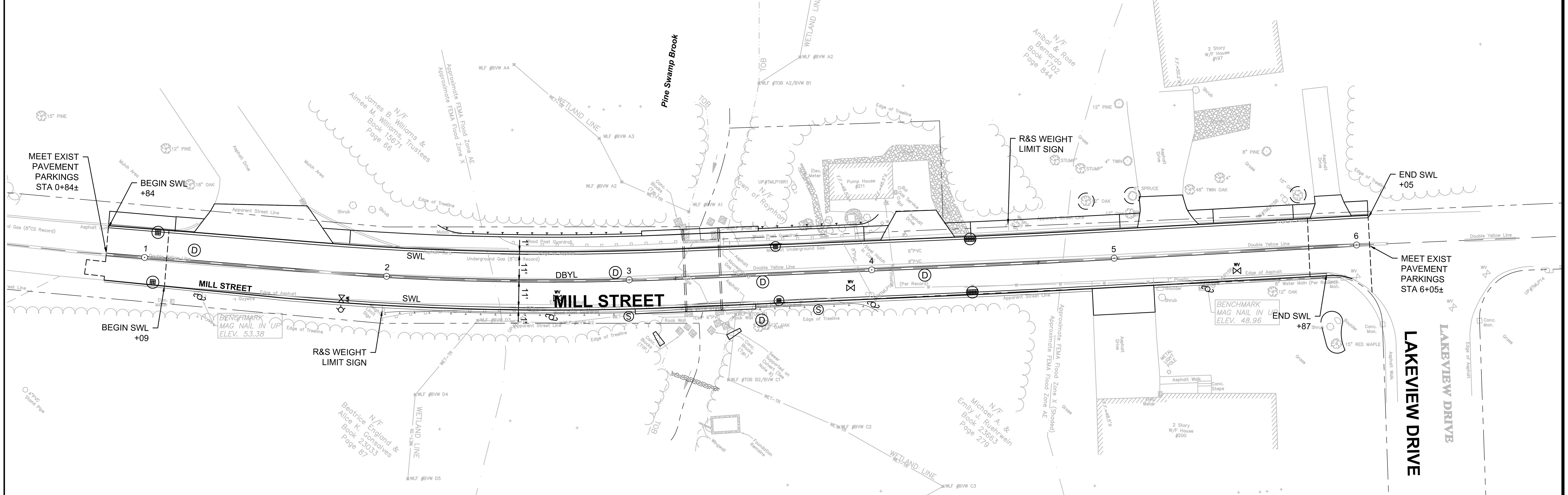

PAVEMENT MARKING AND SIGNAGE PLAN PLAN
SCALE: 1"=20'
0 20' 40' 80'

COPYRIGHT 2016 WESTON & SAMPSON

Weston & Sampson
100 Foxborough Boulevard Suite 250
Foxborough, MA 02035
508.698.3034 800.SAMPSON
www.westonandsampson.com

No.	Date	Dr.By	Ck.By	App.By	Description
		A	P	P	R O V E D

6.14.22
DATE
REGISTERED PROFESSIONAL ENGINEER

COMMONWEALTH OF MASSACHUSETTS LAURENCE F. KEEGAN JR. CIVIL NO. 33796 REGISTERED PROFESSIONAL ENGINEER

TOWN OF RAYNHAM, MASSACHUSETTS
DEPARTMENT OF PUBLIC WORKS

PROPOSED BRIDGE REPLACEMENT - BRIDGE NO. R-02-024
MILL STREET OVER PINE SWAMP BROOK

SCALE:	CONTRACT:	JOB NO.	DR BY	DSN BY	CHK BY	APP BY
AS SHOWN	-	2190328	GTS	GTS	AKP	LFK

CADD NO. -
FILE NO. -

ALIGNMENT - MILL STREET CONSTRUCTION BASELINE DATA								
NUMBER	STARTING STATION	NORTHING	EASTING	CURVE DATA	LINE DATA	ENDING STATION	NORTHING	EASTING
L1	0+00.00	2801769.914	775819.427		N55°46'20"E 71.82'	0+71.82	2801810.313	775878.811
L2	0+71.82	2801810.313	775878.811		N54°11'08"E 98.03'	1+69.85	2801867.674	775958.303
C1	1+69.85	2801867.674	775958.303	R=1199.54' Δ=7°07'46" L=149.26' T=74.73'		3+19.11	2801962.312	776073.602
L3	3+19.11	2801962.312	776073.602		N47°03'22"E 126.14'	4+45.25	2802048.247	776165.937
C2	4+45.25	2802048.247	776165.937	R=2000.00' Δ=0°40'08" L=23.34' T=11.67'		4+68.59	2802064.251	776182.933
L4	4+68.59	2802064.251	776182.933		N46°23'14"E 131.39'	5+99.98	2802154.882	776278.063
L5	5+99.98	2802154.882	776278.063		N47°04'48"E 94.34'	6+94.32	2802219.122	776347.145

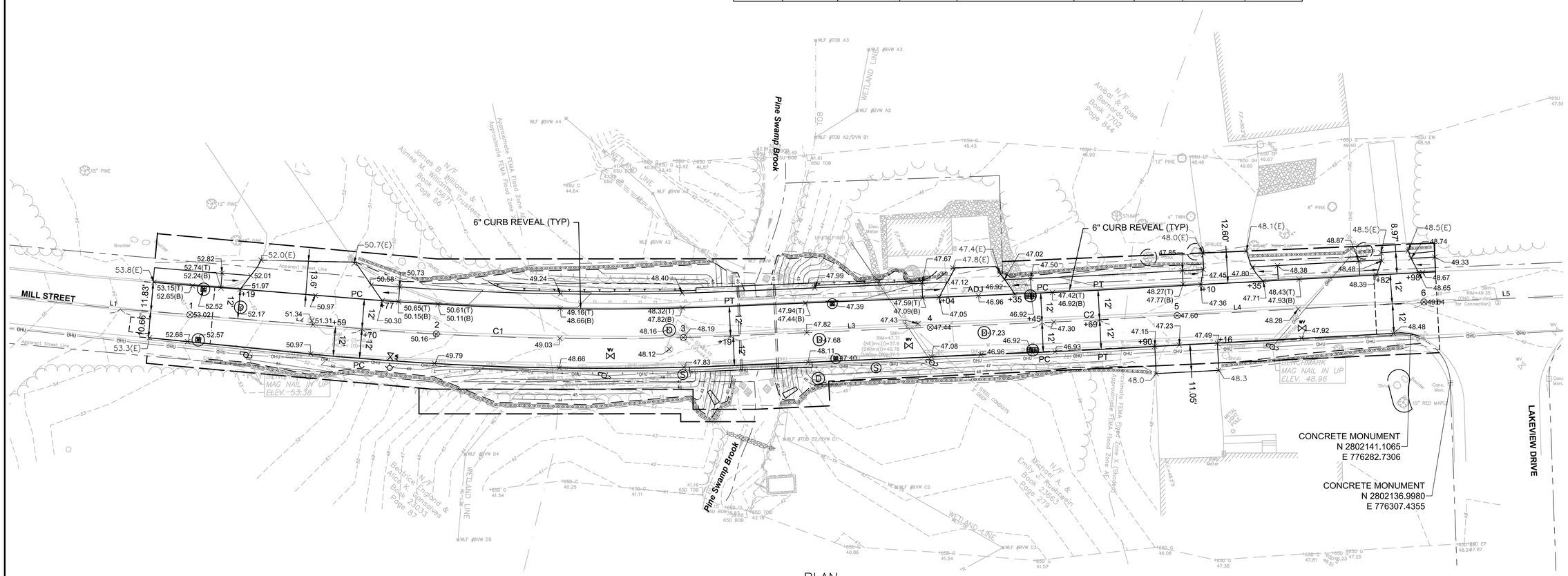

COPYRIGHT 2016 WESTON & SAMPSON

Weston & Sampson
100 Foxborough Boulevard Suite 250
Foxborough, MA 02035
508.698.3034 800.SAMPSON
www.westonandsampson.com

No.	Date:	Dr.By	Ck.By	App.By	Description
					A P P R O V E D

6.14.22
DATE
REGISTERED PROFESSIONAL ENGINEER

COMMONWEALTH OF MASSACHUSETTS LAURENCE F. KEEGAN, JR. CIVIL No. 33708 REGISTERED PROFESSIONAL ENGINEER

TOWN OF RAYNHAM, MASSACHUSETTS
DEPARTMENT OF PUBLIC WORKS
PROPOSED BRIDGE REPLACEMENT - BRIDGE NO. R-02-024
MILL STREET OVER PINE SWAMP BROOK
GRADING AND TIE IN PLAN

CADD NO.	SCALE:	CONTRACT:	JOB NO.	DR.BY	DSN.BY	CHK.BY	APP.BY
-	AS SHOWN	-	2190328	GTS	GTS	AKP	LFK

C-7
FILE NO. -

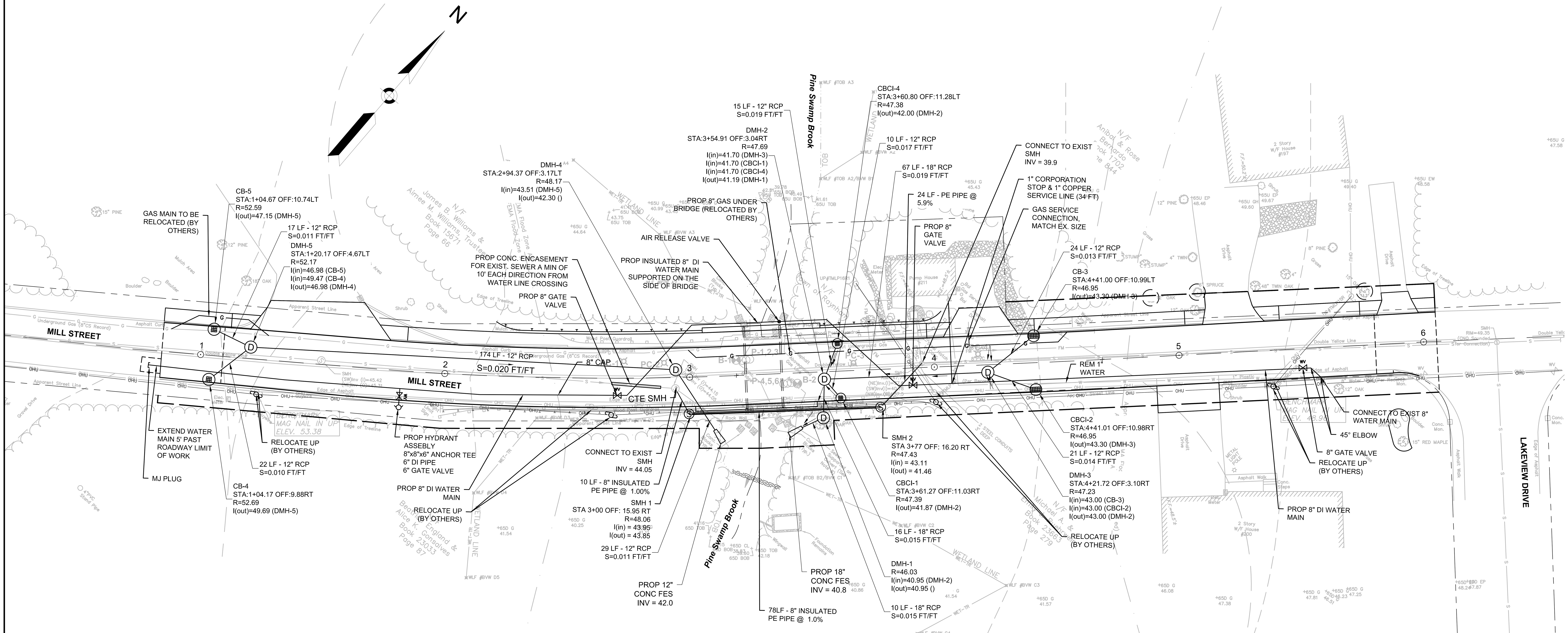

PLAN

SCALE: 1"=20'

0 20' 40' 80'

COPYRIGHT 2016 WESTON & SAMPSON

Weston & Sampson
100 Foxborough Boulevard Suite 250
Foxborough, MA 02035
508.698.3034 800.SAMPSON
www.westonandsampson.com

No.	Date	Dr.By	Ck.By	App.By	Description

APPROVED

REGISTERED PROFESSIONAL ENGINEER

DATE 6.14.22

COMMONWEALTH OF MASSACHUSETTS LAURENCE F. KEEGAN, JR. CIVIL NO. 33708 REGISTERED PROFESSIONAL ENGINEER

TOWN OF RAYNHAM, MASSACHUSETTS
DEPARTMENT OF PUBLIC WORKS

PROPOSED BRIDGE REPLACEMENT - BRIDGE NO. R-02-024
MILL STREET OVER PINE SWAMP BROOK

UTILITY PLAN

CADD NO.	SCALE:	CONTRACT:	JOB NO.	DR.BY	DSN.BY	CHK.BY	APP.BY
-	AS SHOWN	-	2190328	GTS	GTS	AKP	LFK

FILE NO. -

C-8

SHEET 8 OF 23

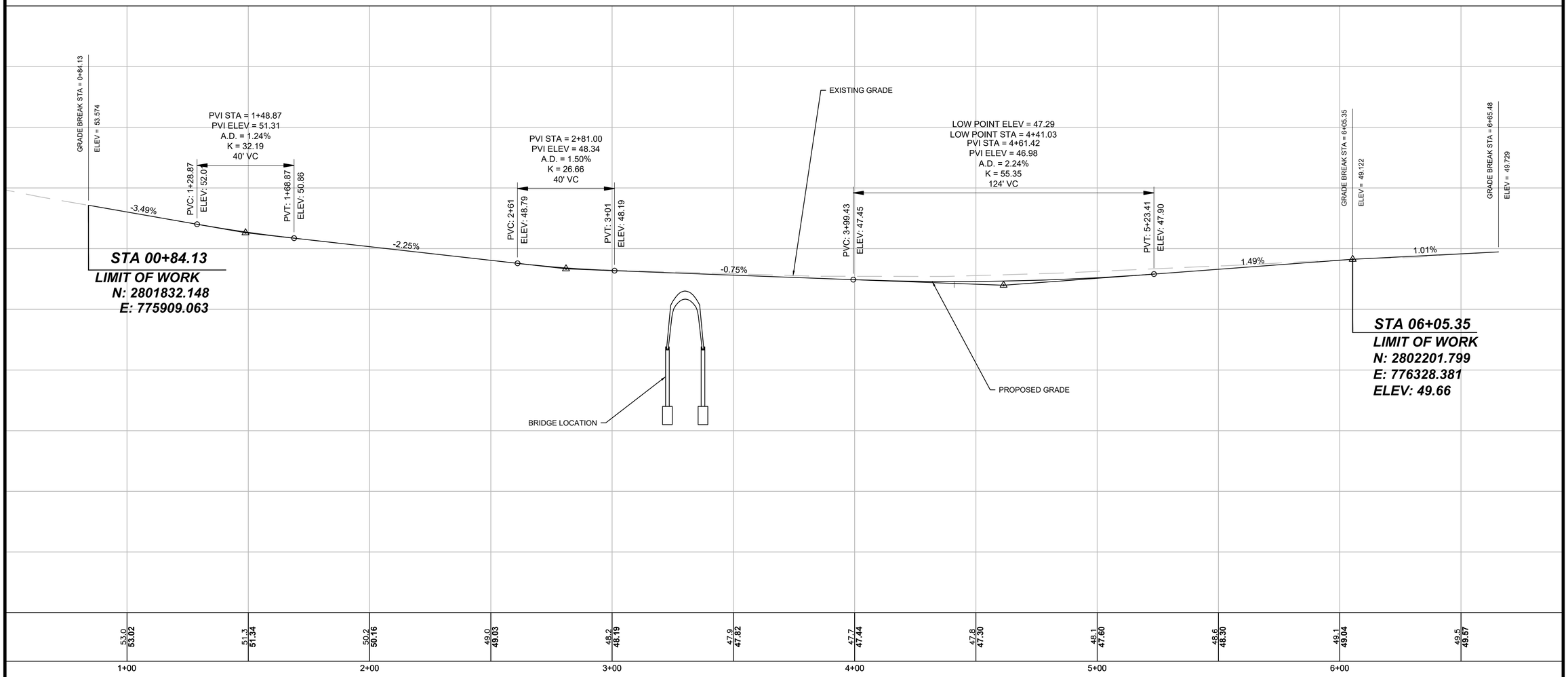

PROFILE

SCALE H: 1"=20'

20' 0' 20' 40'

4' 0' 4' 8'

SCALE V: 1"=4'

COPYRIGHT 2016 WESTON & SAMPSON

P:\MA\Raynham MA\2190328-Mill Street Bridge Replacement\CAD\Mill-St_Model.dwg

Weston & Sampson
100 Foxborough Boulevard Suite 250
Foxborough, MA 02035
508.698.3034 800.SAMPSON
www.westonandsampson.com

No.	Date	Dr.By	Ck.By	App.By	Description
					APPROVED

6.14.22
DATE

REGISTERED PROFESSIONAL ENGINEER

COMMONWEALTH OF MASSACHUSETTS
LAURENCE F. KEEGAN, JR.
CIVIL
NO. 33708
REGISTERED PROFESSIONAL ENGINEER

TOWN OF RAYNHAM, MASSACHUSETTS
DEPARTMENT OF PUBLIC WORKS

PROPOSED BRIDGE REPLACEMENT - BRIDGE NO. R-02-024
MILL STREET OVER PINE SWAMP BROOK

ROADWAY PROFILE

CADD NO.	SCALE:	CONTRACT:	JOB NO.	DR.BY	DSN.BY	CHK.BY	APP.BY
-	AS SHOWN	-	2190328	GTS	GTS	AKP	LFK

C-9

FILE NO. -

3+00

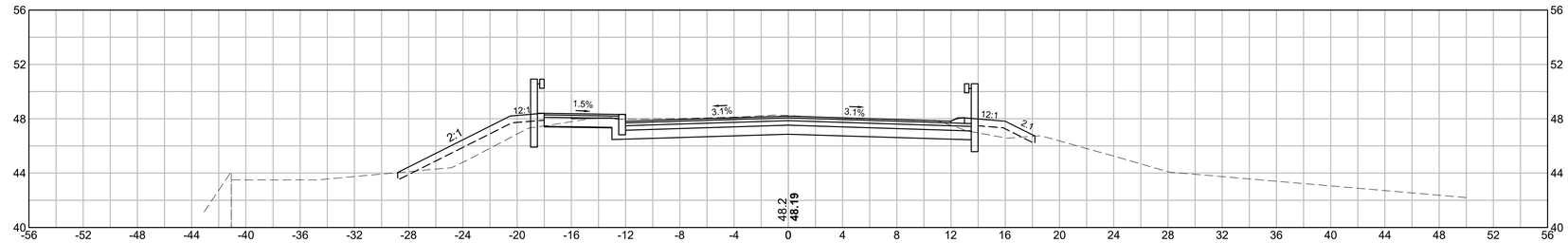

2+50

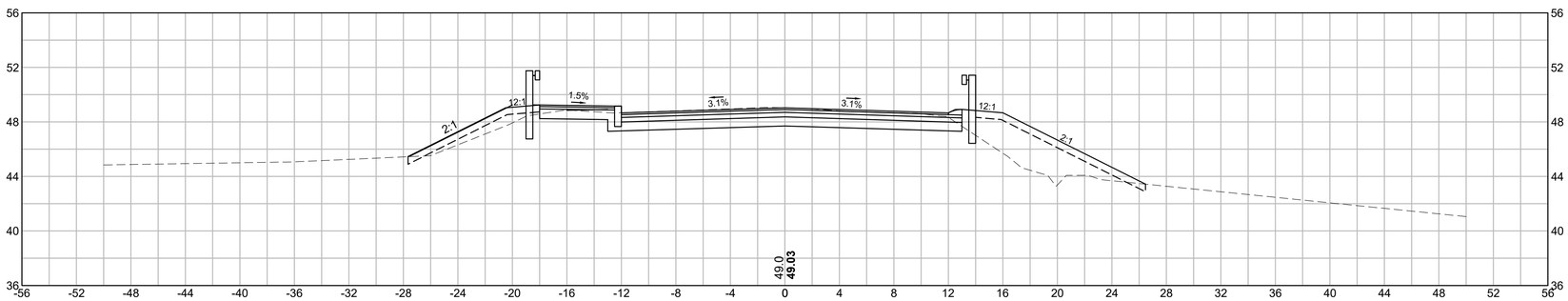

2+00

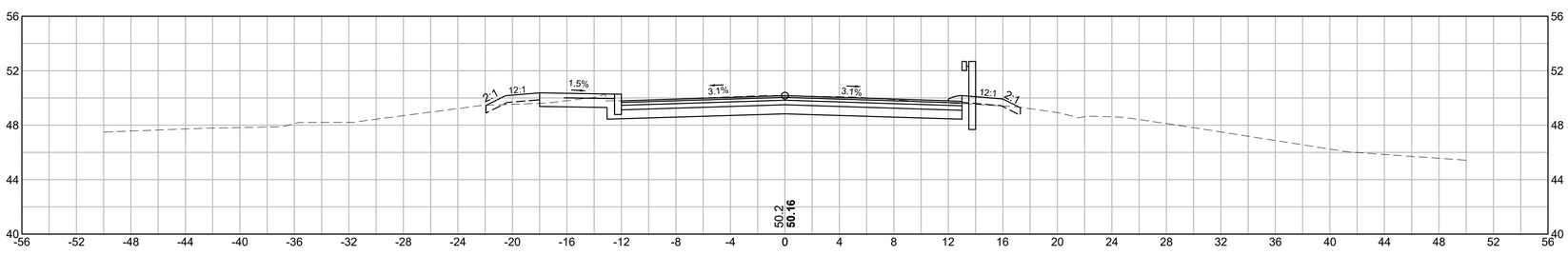

1+50

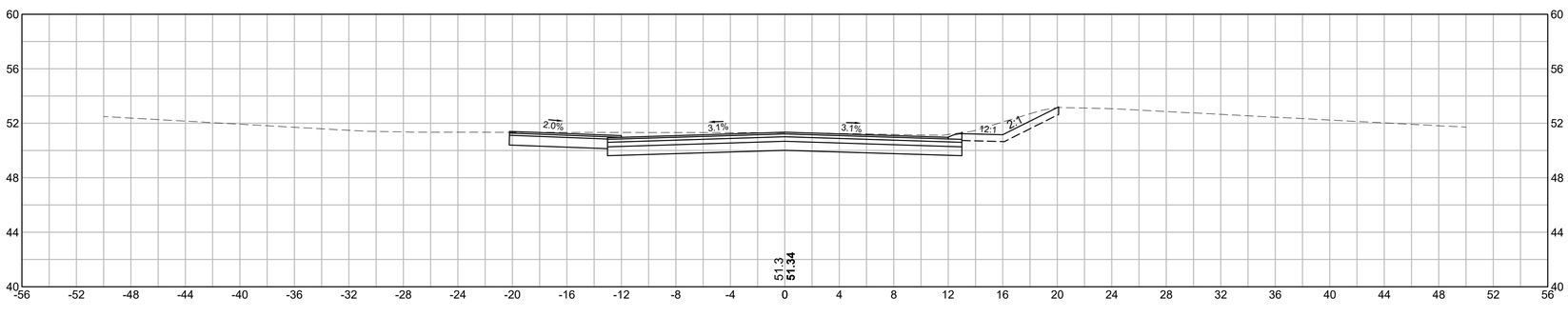

COPYRIGHT 2016 WESTON & SAMPSON

Weston & Sampson
100 Foxborough Boulevard Suite 250
Foxborough, MA 02035
508.698.3034 800.SAMPSON
www.westonandsampson.com

No.	Date	Dr.By	Ck.By	App.By	Description
		A	P	P	R O V E D

6.14.22
DATE

REGISTERED PROFESSIONAL ENGINEER

COMMONWEALTH OF MASSACHUSETTS
LAURENCE F. KUGLER, JR.
CIVIL
NO. 33708
REGISTERED PROFESSIONAL ENGINEER

TOWN OF RAYNHAM, MASSACHUSETTS
DEPARTMENT OF PUBLIC WORKS
PROPOSED BRIDGE REPLACEMENT, BRIDGE NO. R-02-024
MILL STREET OVER PINE SWAMP BROOK

CROSS SECTIONS

CADD NO.	SCALE:	CONTRACT:	JOB NO.	DR.BY	DSN.BY	CHK.BY	APP.BY
-	AS SHOWN	-	2190328	GTS	GTS	AKP	LFK

C-10

FILE NO. -

4+50

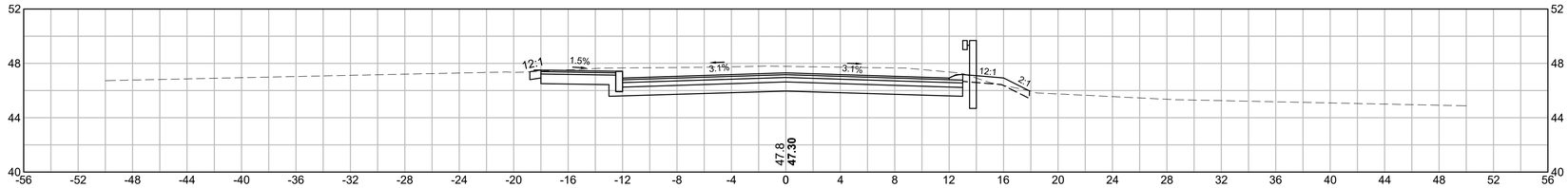

4+20

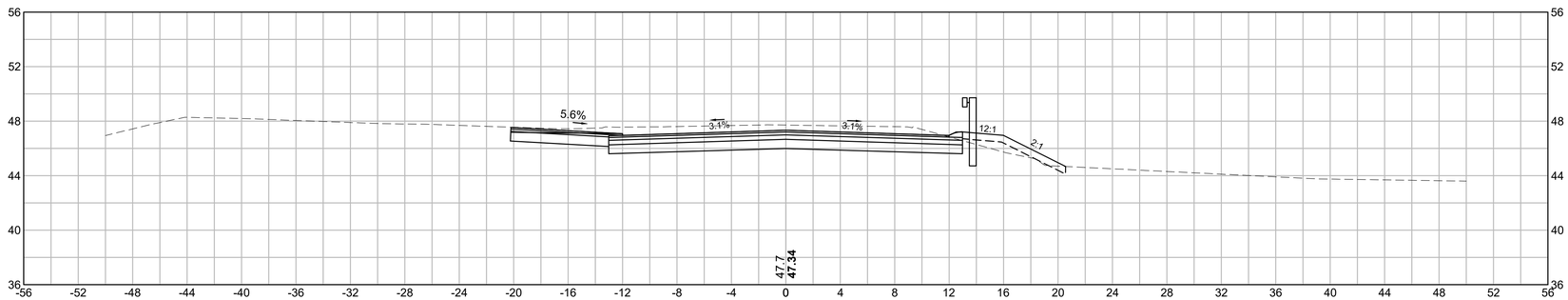

4+00

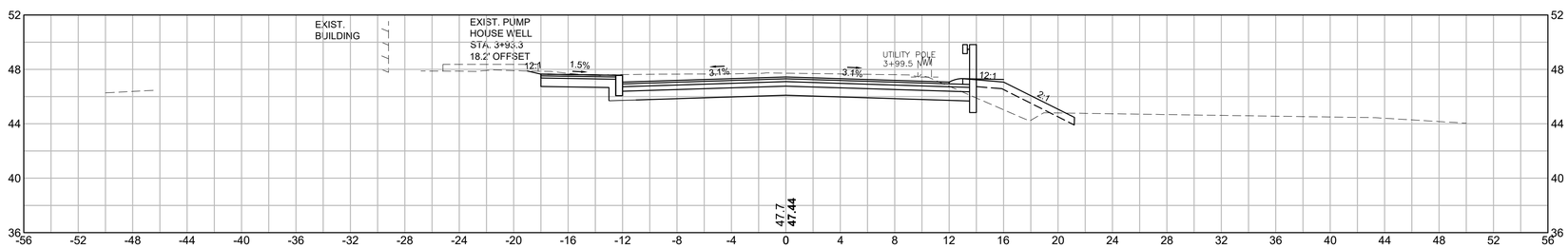

3+50

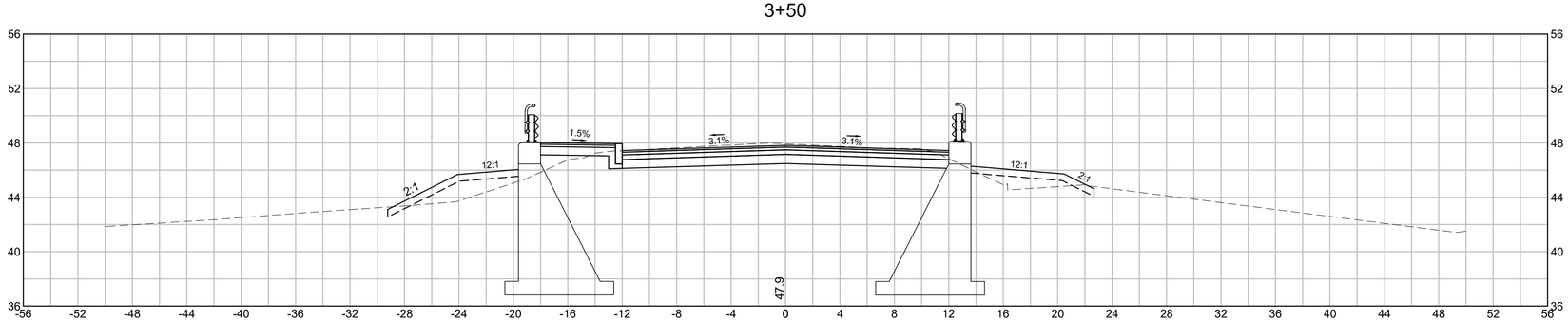

COPYRIGHT 2016 WESTON & SAMPSON

Weston & Sampson
100 Foxborough Boulevard
Suite 250
Foxborough, MA 02035
508.698.3034
800.SAMPSON
www.westonandsampson.com

No.	Date	Dr.By	Ck.By	App.By	Description
		A	P	P	R O V E D

6.14.22
DATE

REGISTERED PROFESSIONAL ENGINEER

COMMONWEALTH OF MASSACHUSETTS
LAURENCE F. KEENAN, JR.
CIVIL
NO. 33708
REGISTERED PROFESSIONAL ENGINEER

TOWN OF RAYNHAM, MASSACHUSETTS
DEPARTMENT OF PUBLIC WORKS

PROPOSED BRIDGE REPLACEMENT, BRIDGE NO. R-02-024
MILL STREET OVER PINE SWAMP BROOK

CROSS SECTIONS

CADD NO.	SCALE:	CONTRACT:	JOB NO.	DR.BY	DSN.BY	CHK.BY	APP.BY
-	AS SHOWN	-	2190328	GTS	GTS	AKP	LFK

C-11

FILE NO. -

6+00

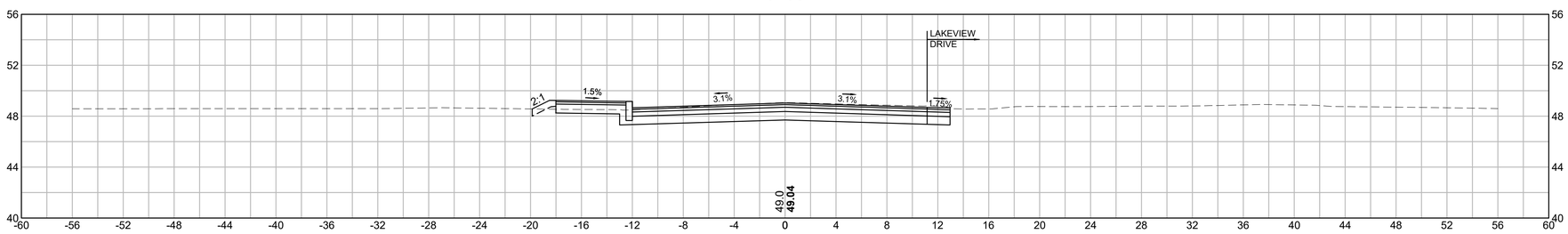

5+50

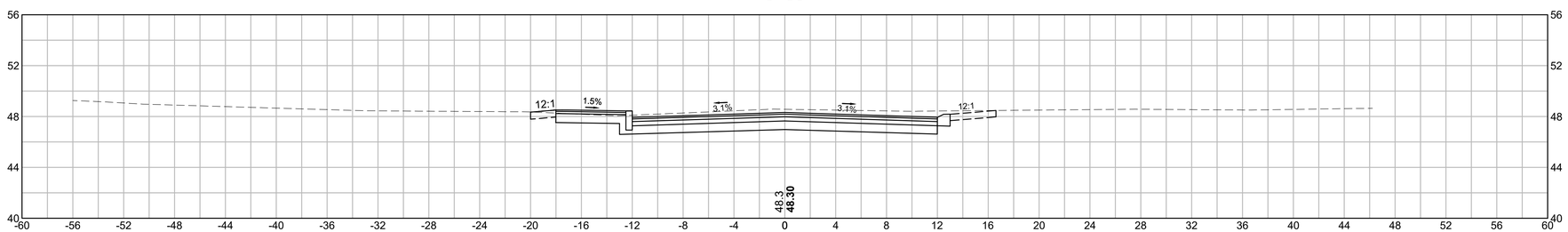

5+00

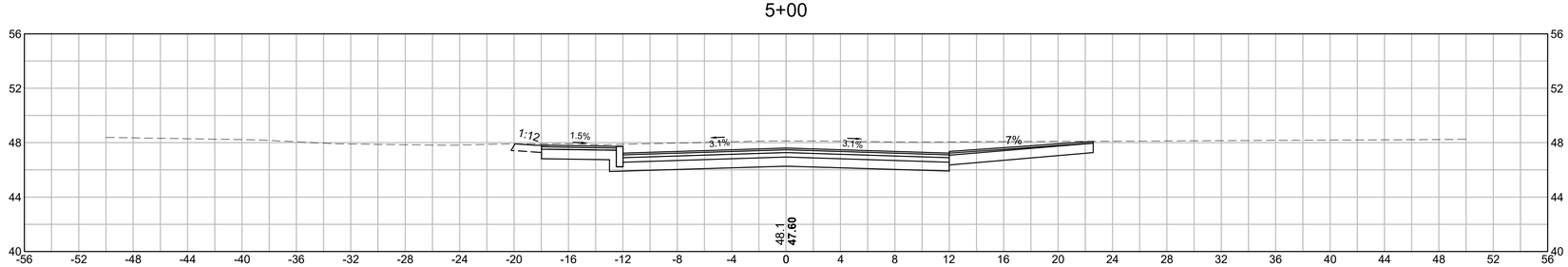

COPYRIGHT 2016 WESTON & SAMPSON

Weston & Sampson
100 Foxborough Boulevard Suite 250
Foxborough, MA 02035
508.698.3034 800.SAMPSON
www.westonandsampson.com

No.	Date	Dr.By	Ck.By	App.By	Description
		A	P	P	R O V E D

6.14.22
DATE
REGISTERED PROFESSIONAL ENGINEER

COMMONWEALTH OF MASSACHUSETTS
LAURENCE F. KEENAN JR.
CIVIL
NO. 33708
REGISTERED PROFESSIONAL ENGINEER

TOWN OF RAYNHAM, MASSACHUSETTS
DEPARTMENT OF PUBLIC WORKS
PROPOSED BRIDGE REPLACEMENT - BRIDGE NO. R-02-024
MILL STREET OVER PINE SWAMP BROOK

CROSS SECTIONS

CADD NO.	SCALE:	CONTRACT:	JOB NO.	DR.BY	DSN.BY	CHK.BY	APP.BY
-	AS SHOWN	-	2190328	GTS	GTS	AKP	LFK

C-12

FILE NO. -

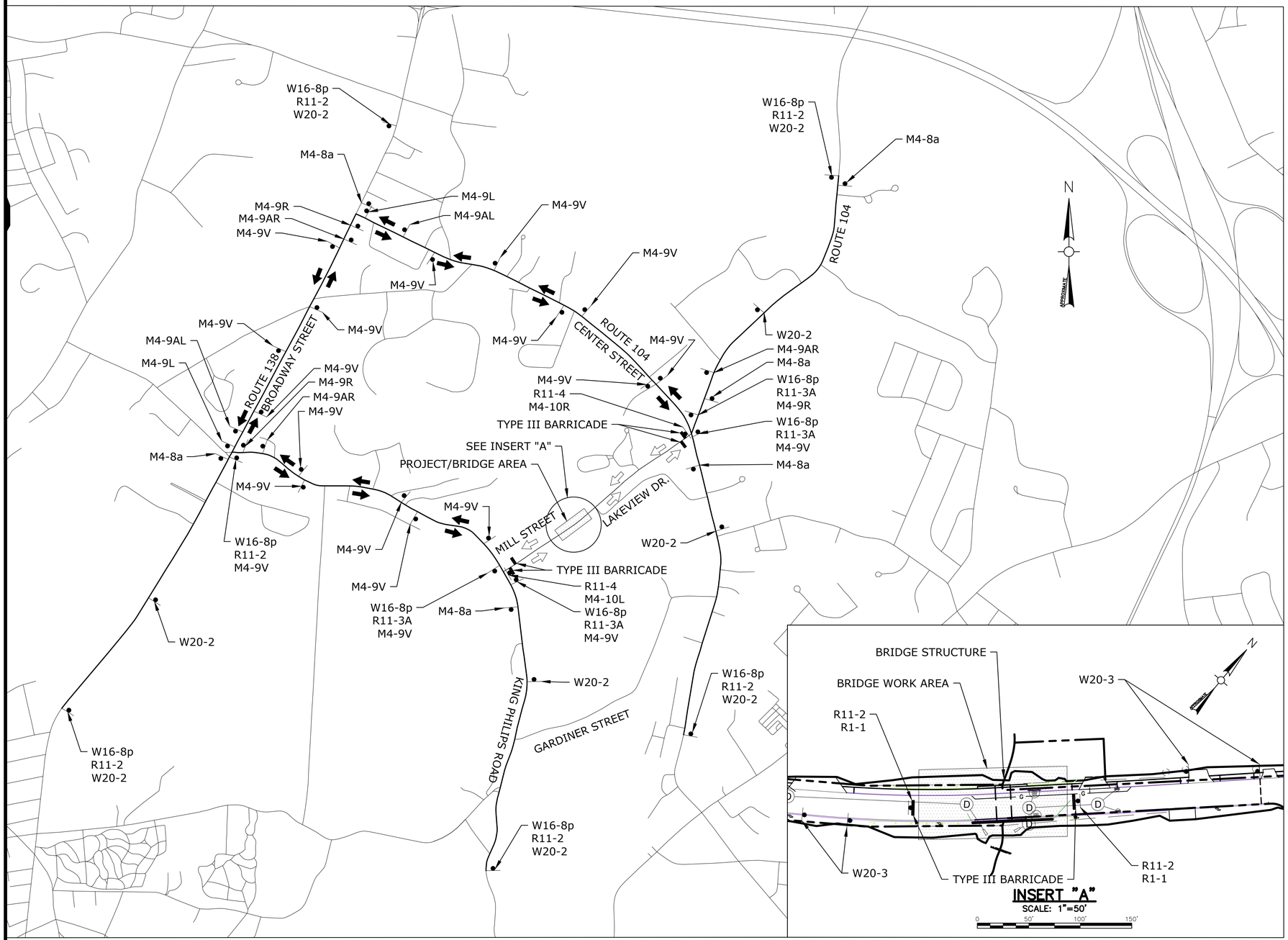

DETOUR PLAN

SCALE: 1"=250'

0 250' 500' 750'

INSERT "A"

SCALE: 1"=50'

0 50' 100' 150'

TEMPORARY TRAFFIC SIGN SUMMARY

IDENTIFICATION NUMBER	SIZE OF SIGN WIDTH	SIZE OF SIGN HEIGHT	TEXT
R1-1	30"	30"	STOP
R11-2	48"	30"	BRIDGE CLOSED
R11-3A	60"	30"	BRIDGE CLOSED AHEAD LOCAL TRAFFIC ONLY
W20-2	36"	36"	DETOUR XXX FT
M4-9AL	30"	24"	DETOUR
M4-9L	30"	24"	DETOUR
M4-9AR	30"	24"	DETOUR
M4-9R	30"	24"	DETOUR
M4-9V	30"	24"	DETOUR
M4-8a	24"	18"	END DETOUR
M4-10R	48"	18"	DETOUR
M4-10L	48"	18"	DETOUR
R11-4	60"	30"	ROAD CLOSED LOCAL TRAFFIC ONLY
W16-8p	VARIES	12"	MILL STREET
W20-3	36"	36"	ROAD CLOSED XXX

LEGEND

- TRAFFIC FLOW DURING CONSTRUCTION
- NORMAL TRAFFIC FLOW
- WORK AREA
- CONSTRUCTION SIGN
- TYPE III BARRICADE
- N.T.S. NOT TO SCALE

COPYRIGHT 2016 WESTON & SAMPSON

Weston & Sampson
100 Foxborough Boulevard Suite 250
Foxborough, MA 02035
508.698.3034 800.SAMPSON
www.westonandsampson.com

No.	Date	Dr.By	Ck.By	App.By	Description

APPROVED 6.14.22 DATE

REGISTERED PROFESSIONAL ENGINEER

COMMONWEALTH OF MASSACHUSETTS LAURENCE F. KEEGAN, JR. NO. 33708 REGISTERED PROFESSIONAL ENGINEER

TOWN OF RAYNHAM, MASSACHUSETTS
DEPARTMENT OF PUBLIC WORKS

PROPOSED BRIDGE REPLACEMENT - BRIDGE NO. R-02-024
MILL STREET OVER PINE SWAMP BROOK

DETOUR PLAN

CADD NO.	SCALE:	CONTRACT:	JOB NO.	DR.BY	DSN.BY	CHK.BY	APP.BY
-	AS SHOWN	-	2190328	GTS	GTS	AKP	LFK

FILE NO. -

TR-1

P:\MA\Raynham MA\2190328-Mill Street Bridge Replacement\CAD\Mill-St_DETOUR.dwg

EROSION CONTROL NOTES:

IT IS THE INTENT OF THE CONTRACT PLANS AND DETAILS TO CONTROL EROSION AND SEDIMENTATION IN ALL PORTIONS OF THE SITE. THE CONTRACTOR IS ALERTED THAT CONTROL OF EROSION AND SEDIMENTATION IS CONSIDERED TO BE ESPECIALLY IMPORTANT IN AND AROUND THE AREAS SHOWN ON THE PLANS AND DELINEATED AS WETLANDS AND WATERCOURSES. THE CONTRACTOR IS TO IMPLEMENT THE EROSION AND SEDIMENTATION CONTROLS INDICATED ON THE PLANS IN ACCORDANCE WITH THE FOLLOWING NOTES, BUT IS ALERTED TO THE FACT THAT ADDITIONAL MEASURES MAY BE REQUIRED TO COMPLY WITH THIS INTENT, AS FIELD CONDITIONS MAY WARRANT. SHOULD SUCH MEASURES BE DETERMINED TO BE REQUIRED OR ORDERED BY THE ENGINEER, THEY ARE TO BE IMPLEMENTED IMMEDIATELY. ANY AND ALL REQUIREMENTS FOR ANY TYPE OF EROSION CONTROL MEASURES SHALL BE INCIDENTAL TO THE PROJECT.

1. ALL WORK SHALL BE IN ACCORDANCE WITH THE CONTRACT DOCUMENTS. THE PROVISIONS OF ALL APPLICABLE PERMITS AND APPROVALS ISSUED BY LOCAL AND STATE REGULATION FOR ACTIVITIES INVOLVING WETLANDS, WATERCOURSES AND/OR EROSION CONTROLS, AND AS DIRECTED BY THE ENGINEER. ALL EROSION AND SEDIMENTATION CONTROL MEASURES SHALL BE CONSTRUCTED IN ACCORDANCE WITH THE MASS DEP'S EROSION AND SEDIMENTATION CONTROL GUIDELINES, AUGUST, 1983 AND THE U.S.D.A. SCS'S EROSION AND SEDIMENT CONTROL IN SITE DEVELOPMENT, MASSACHUSETTS CONSERVATION GUIDE, SEPTEMBER 1983.

2. TEMPORARY EROSION AND SEDIMENTATION CONTROL MEASURES SHALL BE INSTALLED PRIOR TO THE COMMENCEMENT OF ANY SITEWORK, SHALL BE MAINTAINED DURING CONSTRUCTION, AND SHALL REMAIN IN PLACE UNTIL ALL SITEWORK IS COMPLETED AND GROUND COVER IS ESTABLISHED (AT LEAST 75% UNIFORM COVERAGE BY NEW SEEDLINGS).

3. ALL EROSION AND SEDIMENTATION CONTROL MEASURES SHALL BE MAINTAINED IN EFFECTIVE CONDITION THROUGHOUT THE CONSTRUCTION PERIOD. THE CONTRACTOR SHALL INSPECT THE EROSION CONTROLS DAILY AND CLEAN ACCUMULATED MATERIALS FROM BEHIND THEM, AS NECESSARY. ALL EROSION AND SEDIMENTATION CONTROL MEASURES FOUND TO BE IN NEED OF REPAIR OR REPLACEMENT SHALL BE IMMEDIATELY CORRECTED, SO AS TO MAINTAIN THE INTEGRITY OF THE EROSION AND SEDIMENTATION CONTROL SYSTEM.

4. SEDIMENT REMOVED FROM CONTROL STRUCTURES SHALL BE DISPOSED OF IN A MANNER WHICH IS CONSISTENT WITH THE INTENT OF THESE PLANS. NO EQUIPMENT OR MATERIAL OF ANY KIND SHALL BE STOCKPILED OR DEPOSITED IN ANY REGULATED AREA UNLESS SPECIFICALLY SHOWN ON THE CONTRACT PLANS OR AUTHORIZED BY PROJECT PERMITS/APPROVALS.

5. STOCKPILED SOIL SHALL BE SURROUNDED WITH STAKED STRAW BALES AND SILTATION FENCES TO PREVENT AND CONTROL SILTATION AND EROSION. STOCKPILES THAT WILL REMAIN EXPOSED FOR MORE THAN 30 DAYS SHALL BE STABILIZED WITH MULCH OR SEEDED FOR TEMPORARY VEGETATIVE COVER.

6. ALL DISTURBED AREAS THAT WILL REMAIN EXPOSED OR UNDISTURBED FOR A PERIOD OF FOURTEEN (14) DAYS OR LONGER, SHALL BE STABILIZED WITH MULCH OR SEEDED FOR TEMPORARY VEGETATIVE COVER.

7. STRAW BALE BARRIERS, COMPOST FILTER TUBES OR EQUIVALENT BARRIER APPROVED BY THE ENGINEER, SHALL BE PLACED AROUND CATCH BASIN INLETS DURING CONSTRUCTION AND SHALL BE MAINTAINED UNTIL CONTRIBUTING AREAS ARE PAVED. SILT FENCE BARRIERS, OR EQUIVALENT BARRIER APPROVED BY THE ENGINEER SHALL BE PLACED BETWEEN FRAMES AND GRATES TO PREVENT ANY TYPE OF SILT RUN-OFF INTO ANY EXISTING OR NEW CATCH BASINS.

8. THE CONTRACTOR SHALL INSPECT ALL PORTIONS OF THE SITE IN ANTICIPATION OF RAINFALL EVENTS TO DETERMINE IF SITE GRADING IS SUFFICIENT TO PREVENT EROSION OF SLOPES OR WATERCOURSES WITHIN THE PROJECT LIMITS. SHOULD ADDITIONAL MEASURES BE REQUIRED, THEY ARE TO BE IMPLEMENTED IMMEDIATELY. IN NO CASE SHALL THE INSTALLATION OF ADDITIONAL MEASURES NECESSARY TO PROTECT SLOPES WITHIN THE PROJECT LIMITS BE DELAYED BEYOND THE COMMENCEMENT OF PRECIPITATION.

9. ALL DISTURBED EARTH SLOPES SHALL BE STABILIZED WITH PERMANENT VEGETATIVE COVER AS SOON AS POSSIBLE. DISTURBED AREAS THAT ARE NOT SUBJECT TO CONSTRUCTION TRAFFIC SHALL RECEIVE A PERMANENT OR TEMPORARY VEGETATIVE COVER AS SOON AS FINAL CONTOURS ARE ESTABLISHED. IF THE SEASON PREVENTS THE ESTABLISHMENT OF A VEGETATIVE COVER, DISTURBED AREAS SHALL BE THOROUGHLY MULCHED. MULCHED AREAS SHALL BE SEEDED AS SOON AS WEATHER CONDITIONS ALLOW.

10. A STOCKPILE OF ADDITIONAL COMPOST TUBES, SILTATION FENCE AND CRUSHED STONE SHALL BE KEPT ON SITE THROUGHOUT THE CONSTRUCTION WORK. THIS MATERIAL SHALL BE INSTALLED AT THE DIRECTION OF THE ENGINEER TO MITIGATE ANY EROSION/SEDIMENTATION CONDITIONS WHICH MAY ARISE.

12. THE CONTRACTOR SHALL REMOVE ALL SEDIMENTATION CONTROL SYSTEMS, REMOVE ALL ACCUMULATED SEDIMENTS, AND SEED THE DISTURBED AREAS WHEN THE CONTROL SYSTEMS ARE NO LONGER REQUIRED. THE CONTRACTOR SHALL REQUEST AND RECEIVE PERMISSION FROM THE ENGINEER PRIOR TO REMOVING ANY CONTROL SYSTEM.

13. ALL WORK ASSOCIATED WITH TEMPORARY EROSION CONTROL MEASURES AND ACTIVITIES NOT INCLUDED UNDER A SPECIFIC PAY ITEM SHALL BE CONSIDERED INCIDENTAL TO THE PROJECT.

14. ALL WORK MUST CONFORM TO THE ORDER OF CONDITIONS AND THE NOTICE OF INTENT FOR THE PROJECT. CONTRACTOR SHALL NOTIFY THE RAYNHAM CONSERVATION COMMISSION SHALL IN WRITING AT LEAST FORTY-EIGHT (48) HOURS PRIOR TO THE START OF ANY CONSTRUCTION AND IDENTIFY THE ON-SITE CONSTRUCTION SUPERVISOR RESPONSIBLE FOR COORDINATING CONSTRUCTION ON SITE AND ENSURING COMPLIANCE WITH THIS ORDER.

15. THE LOCATION OF THE INSTALLED EROSION CONTROL MEASURES SHALL BE CERTIFIED IN WRITING TO THE CONSERVATION COMMISSION BY A MASSACHUSETTS REGISTERED LAND SURVEYOR PRIOR TO START OF ANY SITE WORK. ALL SIGNATURES AND STAMPS SHALL BE PRINTED WITH ORIGINAL WET INK.

16. PRIOR TO CONSTRUCTION, PERMANENT 3-FOOT SCHEDULE PVC PIPE SHALL BE DRIVEN INTO THE GROUND AT 30 FOOT INTERVALS ALONG THE WETLANDS LINE AS INDICATED ON THE PLAN. THE PIPES WILL REMAIN EXPOSED 1 FOOT ABOVE THE GROUND AND THE TOPS SHALL BE CAPPED AND SPRAY PAINTED GREEN FOR FUTURE REFERENCE. ADDITIONALLY A CONTRACTOR SHALL INSTALL A 25' NO ACTIVITY BOUNDARY MARKERS. UPON INSTALLATION OF THE REQUIRED PERMANENT MARKERS FOR THE WETLANDS AND 25 FOOT NO ACTIVITY BOUNDARY, CONTRACTOR SHALL SCHEDULE AN INSPECTION OF THE MARKERS BY CONSERVATION COMMISSION PRIOR TO START OF CONSTRUCTION.

17. CONTRACTOR SHALL SUBMIT TO THE TOWN AND TO CONSERVATION COMMISSION A SEQUENCING AND CONSTRUCTION PROCEDURES FOR UTILITIES, SEWER, DRAINAGE, AND WATER OVER OR UNDER THE BRIDGE PRIOR TO CONSTRUCTION

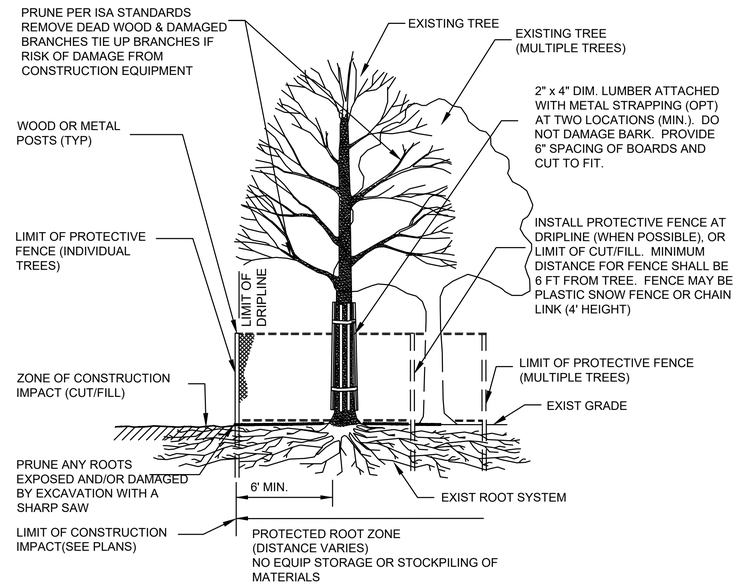

1 EXISTING TREE PROTECTION
SCALE: N.T.S.

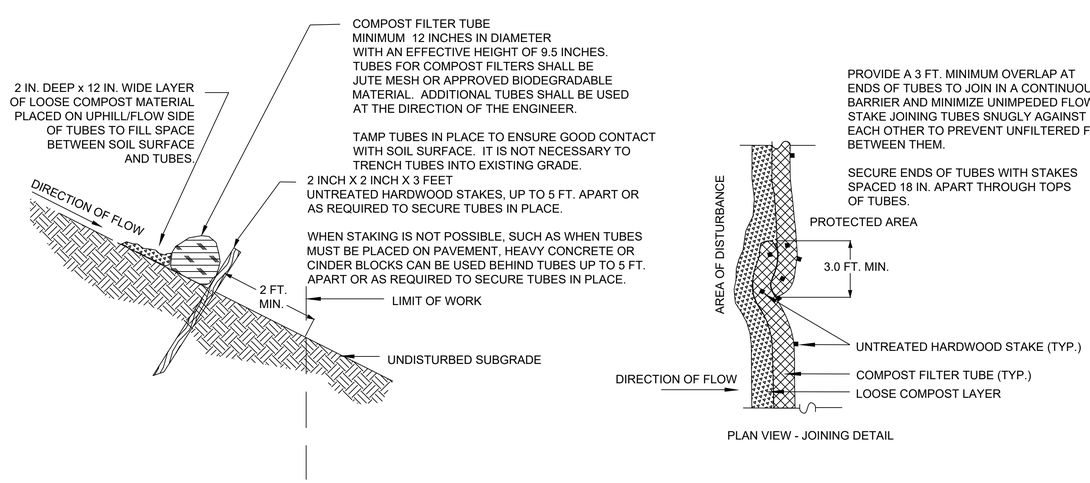

2 SINGLE COMPOST FILTER TUBE DETAIL
SCALE: N.T.S.

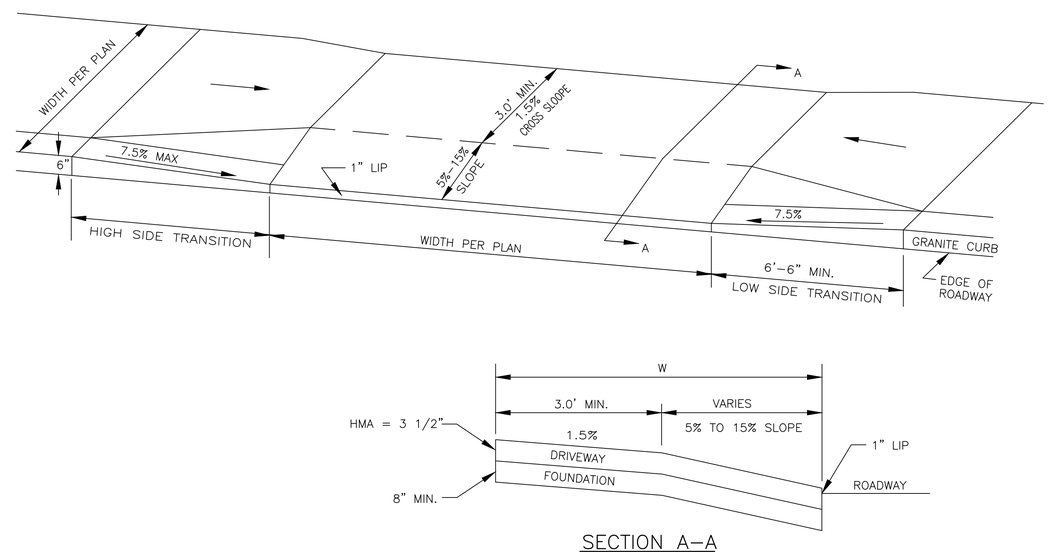

3 HMA DRIVEWAY AND SIDEWALK
SCALE: N.T.S.

COPYRIGHT 2016 WESTON & SAMPSON

Weston & Sampson
100 Foxborough Boulevard Suite 250
Foxborough, MA 02035
508.698.3034 800.SAMPSON
www.westonandsampson.com

No.	Date	Dr.By	Ck.By	App.By	Description
		A	P	P	R O V E D

6.14.22
DATE
REGISTERED PROFESSIONAL ENGINEER

COMMONWEALTH OF MASSACHUSETTS LAURENCE F. KEENAN, JR. CIVIL NO. 33708 REGISTERED PROFESSIONAL ENGINEER

TOWN OF RAYNHAM, MASSACHUSETTS
DEPARTMENT OF PUBLIC WORKS
PROPOSED BRIDGE REPLACEMENT - BRIDGE NO. R-02-024
MILL STREET OVER PINE SWAMP BROOK
DETAILS

SCALE:	CONTRACT:	JOB NO.	DR.BY	DSN.BY	CHK.BY	APP.BY
AS SHOWN	-	2190328	GTS	GTS	AKP	LFK

CADD NO. -
FILE NO. -

DET-1

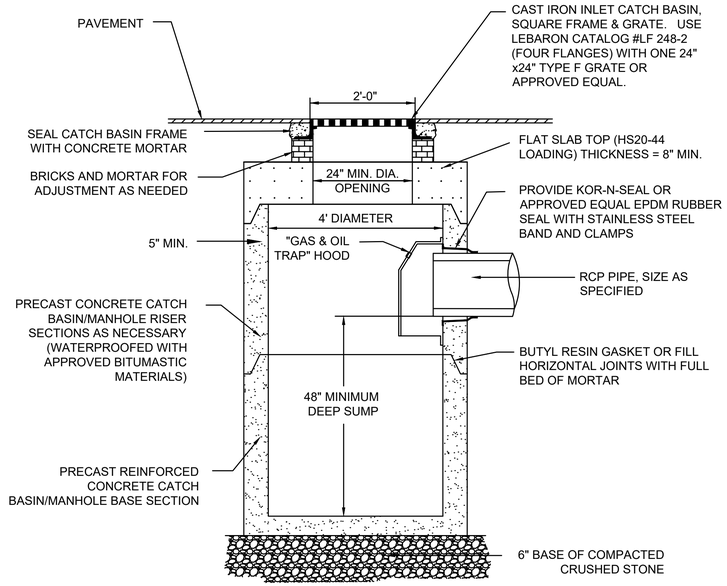

NOTE: FOR DOUBLE CATCH BASINS, STRUCTURE SHALL BE 6' IN DIAMETER.

1 STANDARD CATCH BASIN
SCALE: N.T.S.

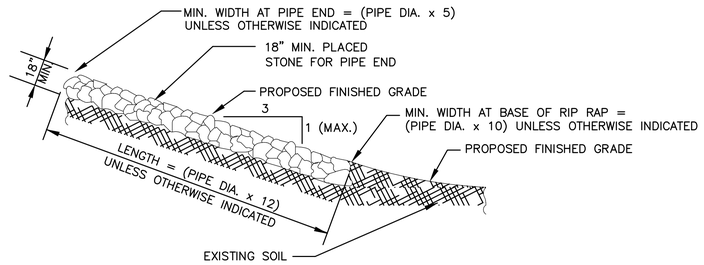

2 RIP RAP FOR PIPE END
SCALE: N.T.S.

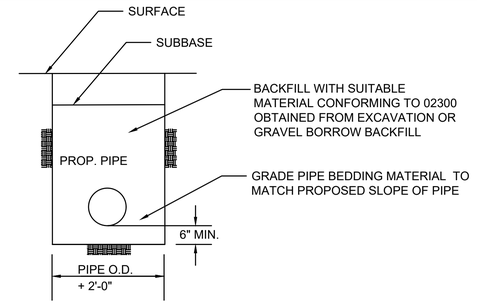

3 DRAINAGE TRENCH DETAIL
SCALE: N.T.S.

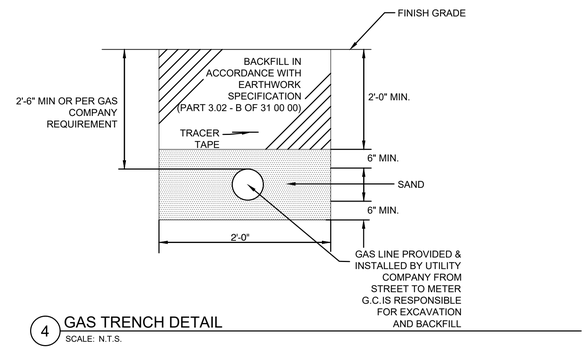

4 GAS TRENCH DETAIL
SCALE: N.T.S.

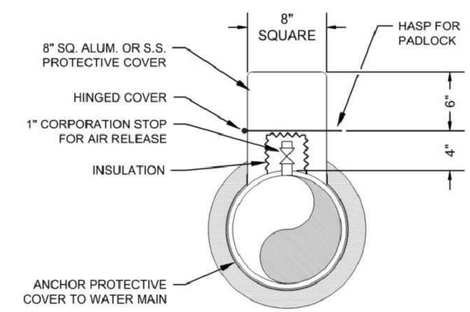

5 WATER MAIN AIR RELEASE VALVE ASSEMBLY BOX
SCALE: N.T.S.

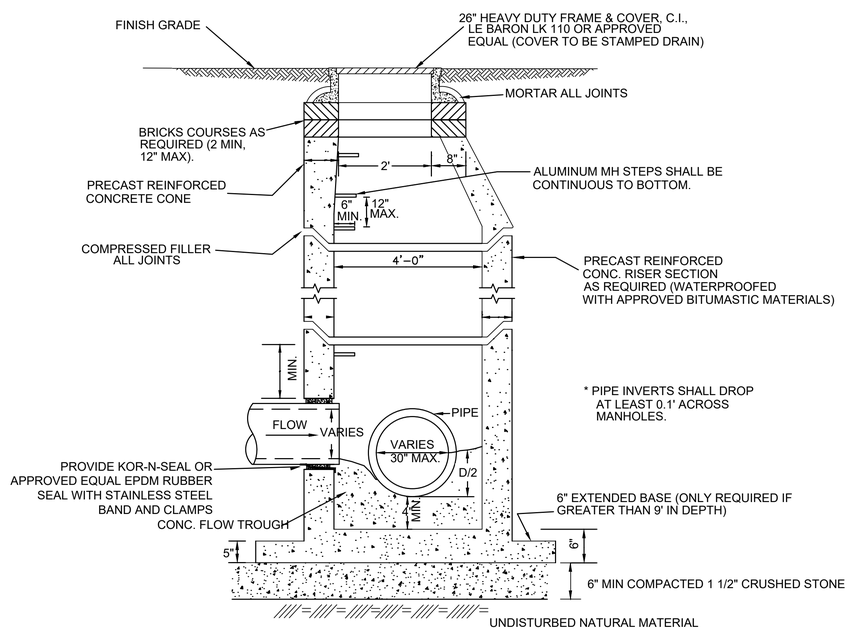

NOTE:
1. IN DRAINAGE MANHOLES PIPE OPENINGS SHALL BE GROUTED WITH NON-SHRINK MORTAR JOINTS. FOR SANITARY MANHOLES PIPE OPENINGS SHALL USE KOR-N-SEAL OR APPROVED EQUAL EPDM RUBBER SEAL WITH STAINLESS STEEL BAND AND CLAMPS

6 TYPICAL PRECAST CONCRETE DRAIN/SEWER MANHOLE
SCALE: N.T.S.

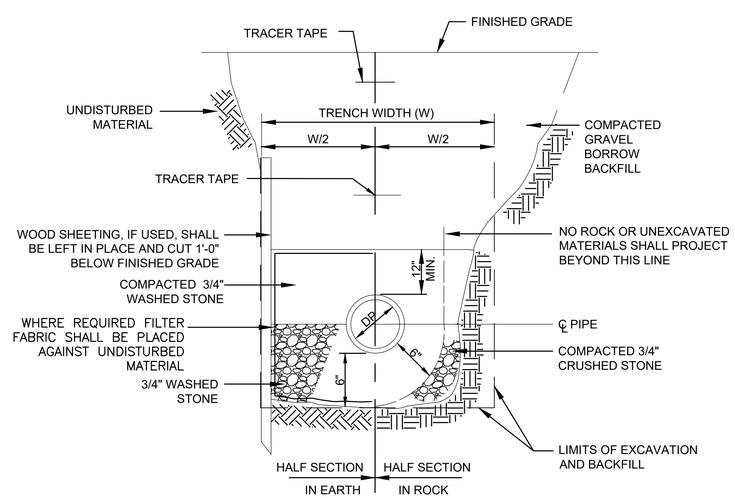

DEPTH TO INVERT	DIAMETER OF PIPE (DP)	MAX. TRENCH WIDTH BELOW LINE OF NARROW TRENCH LIMIT (SHEETED OR UNSHEETED) (W)
0-12'	TO 4"	5'-0"

7 SEWER TRENCH DETAIL
SCALE: N.T.S.

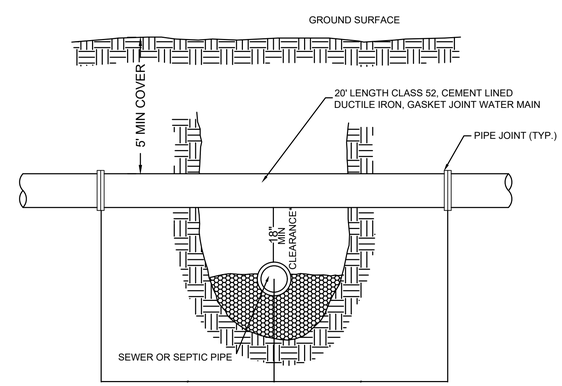

*WHEN THE CROSSING AS SHOWN IS LESS THAN 18" VERTICAL CLEARANCE THE UTILITY BEING INSTALLED MUST BE SLEEVED 10' ON BOTH SIDES OF THE CROSSING WITH SDR35 PVC PIPE. IF THE SEWER MAIN OR SERVICE CROSSES ABOVE THE WATER MAIN OR SERVICE, AGAIN THE UTILITY BEING INSTALLED MUST BE SLEEVED 10' ON BOTH SIDES OF THE CROSSING WITH SDR35 PVC PIPE.

8 TYPICAL WATER CROSSING
SCALE: N.T.S.

COPYRIGHT 2016 WESTON & SAMPSON

Weston & Sampson
100 Foxborough Boulevard Suite 250
Foxborough, MA 02035
508.698.3034 800.SAMPSON
www.westonandsampson.com

No.	Date	Dr.By	Ck.By	App.By	Description
		A	P	P	R O V E D

Lawrence F. Kugler 6.14.22
REGISTERED PROFESSIONAL ENGINEER
DATE

COMMONWEALTH OF MASSACHUSETTS LAWRENCE F. KUGLER JR. CIVIL NO. 33708 REGISTERED PROFESSIONAL ENGINEER

TOWN OF RAYNHAM, MASSACHUSETTS
DEPARTMENT OF PUBLIC WORKS
PROPOSED BRIDGE REPLACEMENT - BRIDGE NO. R-02-024
MILL STREET OVER PINE SWAMP BROOK
DETAILS

SCALE:	CONTRACT:	JOB NO.	DR.BY	DSN.BY	CHK.BY	APP.BY
AS SHOWN	-	2190328	GTS	GTS	AKP	LFK

CADD NO. -
FILE NO. -

DET-2

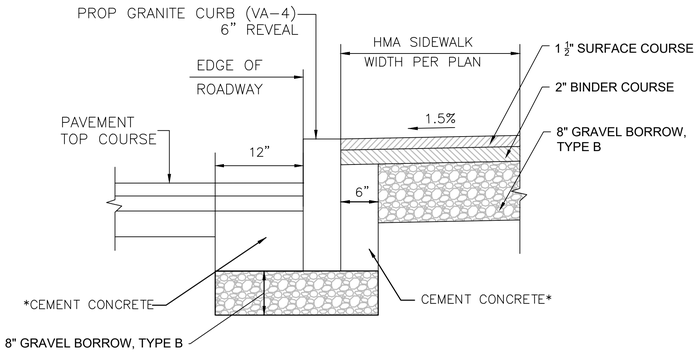

* CEMENT CONCRETE SHALL BE INCLUDED IN BID PRICE FOR GRANITE CURB.

1 HMA SIDEWALK & GRANITE CURB DETAIL
SCALE: N.T.S.

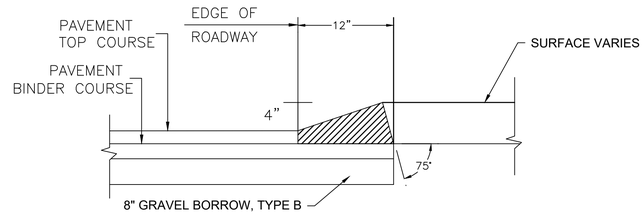

2 HMA CAPE COD BERM
SCALE: N.T.S.

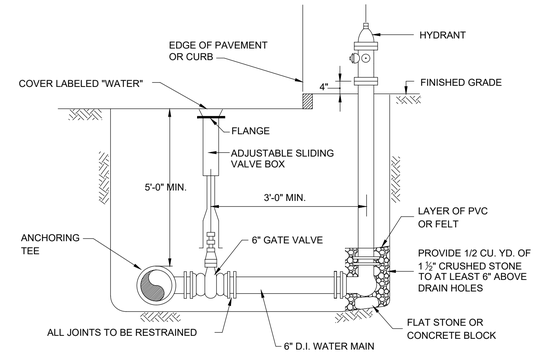

NOTES

1. HYDRANT GATE VALVE TO BE LOCATED WITHIN ROADWAY PAVEMENT WHERE POSSIBLE.
2. GATES VALVES SHALL BE AWWA RESILIENT SEAT GATE VALVES.
3. USE TWO 6" BENDS OR OFFSET ON LATERAL TO ACHIEVE REQUIRED HYDRANT ELEVATION IF NECESSARY.

3 HYDRANT AND VALVE DETAIL
SCALE: N.T.S.

NOTES:

1. GATE VALVE TO BE LOCATED WITHIN ROADWAY PAVEMENT WHERE POSSIBLE
2. PROPER SIZE VALVE BOX SHALL BE INSTALLED WHERE GATE VALVES ARE SHOWN ON PLANS

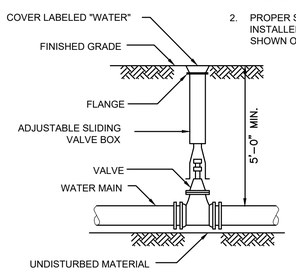

4 VALVE AND BOX DETAIL
SCALE: N.T.S.

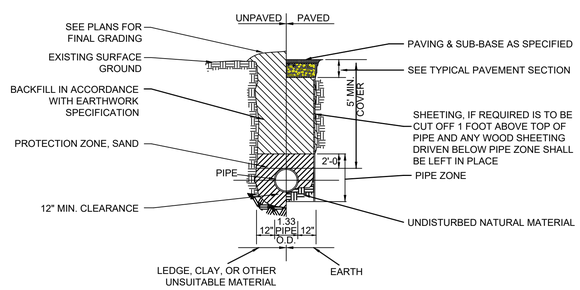

5 TYPICAL WATER TRENCH DETAIL
SCALE: N.T.S.

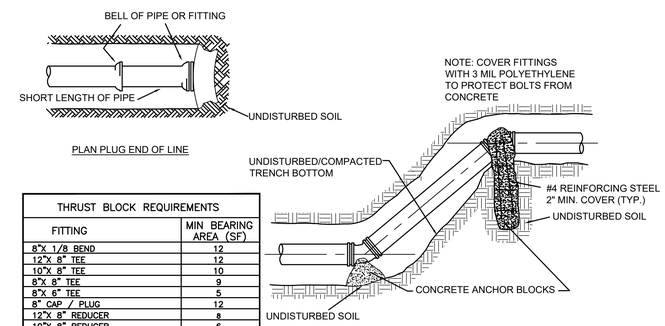

THRUST BLOCK REQUIREMENTS	
FITTING	MIN BEARING AREA (SF)
8"X 1/8 BEND	12
12"X 8" TEE	12
10"X 8" TEE	10
8"X 8" TEE	9
8"X 6" TEE	5
8" CAP / PLUG	12
12"X 8" REDUCER	8
10"X 8" REDUCER	6
8" X 6" REDUCER	4
8" 22 1/2" & 45° BENDS	8
ALL TEES AND VALVES	10
HYDRANTS	9

6 ANCHORAGE DETAILS
SCALE: N.T.S.

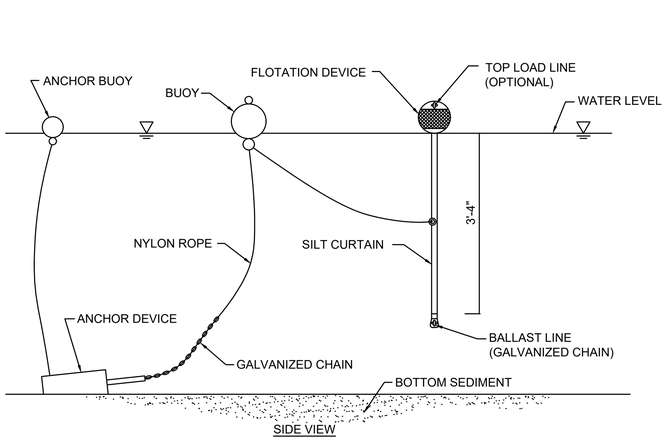

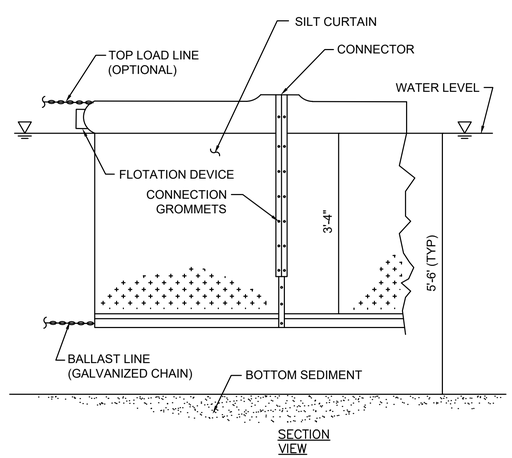

7 FLOATING TURBIDITY CURTAIN
SCALE: N.T.S.

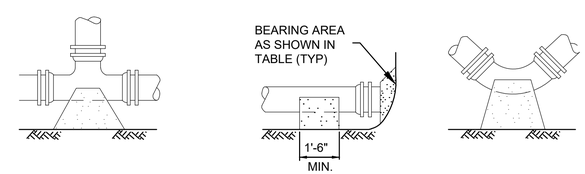

TEE DETAIL (PLAN VIEW) | CAP DETAIL (PLUG SIMILAR) (SECTION VIEW) | BEND DETAIL (PLAN VIEW)

TABLE OF CONCRETE THRUST RESTRAINT MINIMUM BEARING AREAS IN SQUARE FEET AGAINST UNDISTURBED MATERIAL FOR WATER MAIN FITTINGS				
SIZE OF MAIN	90° BENDS, TEES, CAPS AND PLUGS	45° BENDS AND WYES	22-1/2° BENDS	11-1/4° BENDS
6", 8"	5	4	2	2
10", 12"	12	9	5	2
16"	20	15	8	4
20"	36	24	13	7

NOTES: 1. ALL WATER MAIN FITTINGS SHALL HAVE CONCRETE BACKING FOR
2. CONTRACTOR SHALL USE CARE TO AVOID PLACEMENT OF

8 CONCRETE THRUST RESTRAINT FOR FITTINGS
SCALE: N.T.S.

COPYRIGHT 2016 WESTON & SAMPSON

Weston & Sampson
100 Foxborough Boulevard Suite 250
Foxborough, MA 02035
508.698.3034 800.SAMPSON
www.westonandsampson.com

No.	Date	Dr.By	Ck.By	App.By	Description
		A	P	P	R O V E D

6.14.22
DATE

REGISTERED PROFESSIONAL ENGINEER

COMMONWEALTH OF MASSACHUSETTS
LAURENCE F. KEENAN, JR.
NO. 33708
CIVIL
REGISTERED PROFESSIONAL ENGINEER

TOWN OF RAYNHAM, MASSACHUSETTS
DEPARTMENT OF PUBLIC WORKS
PROPOSED BRIDGE REPLACEMENT - BRIDGE NO. R-02-024
MILL STREET OVER PINE SWAMP BROOK

DETAILS

SCALE:	CONTRACT:	JOB NO.	DR.BY	DSN.BY	CHK.BY	APP.BY
AS SHOWN	-	2190328	GTS	GTS	AKP	LFK

CADD NO. -

DET-3

FILE NO. -

SHEET 16 OF 23

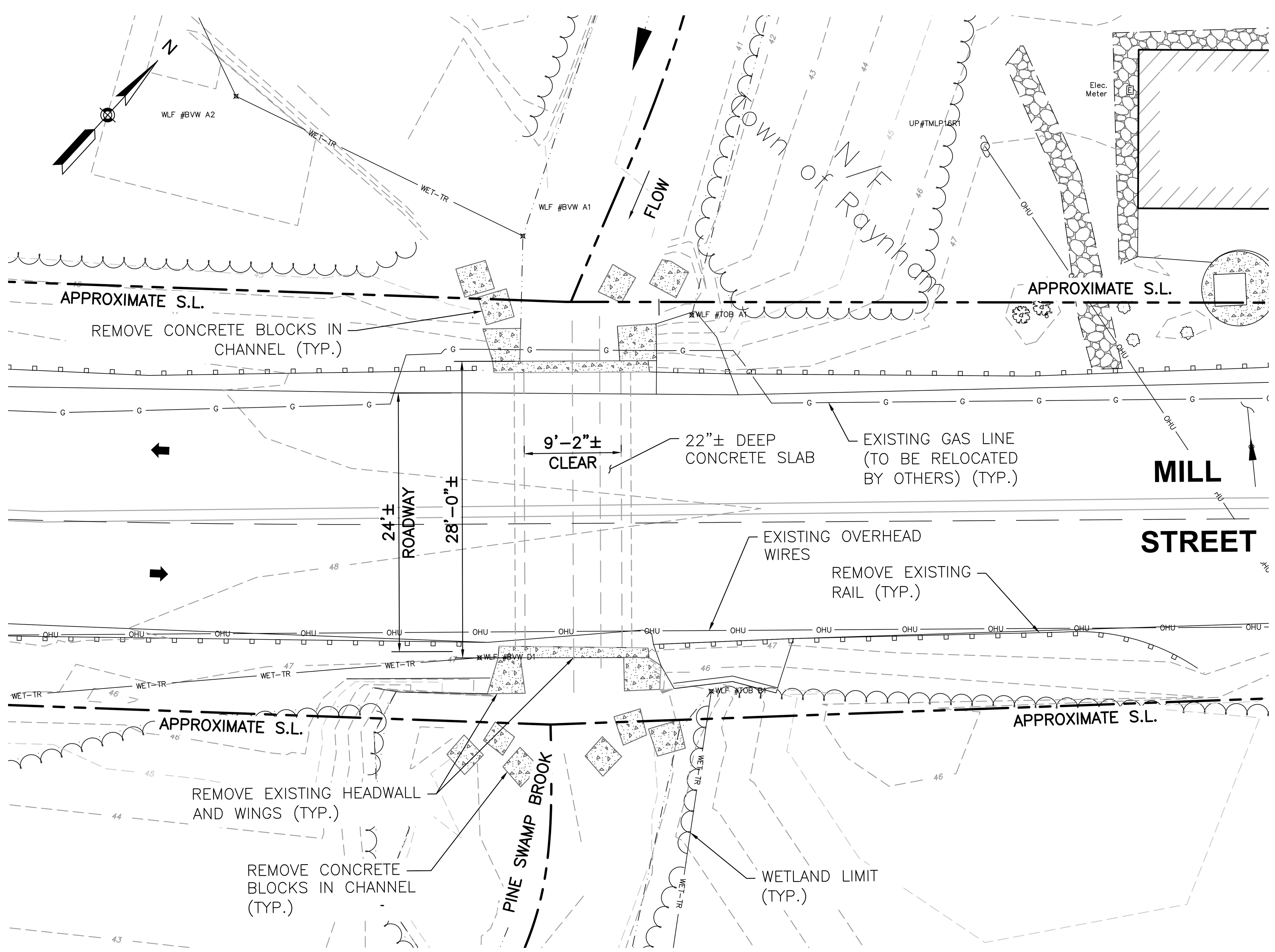

EXISTING PLAN – MILL STREET

SCALE: $\frac{1}{8}$"=1'0"

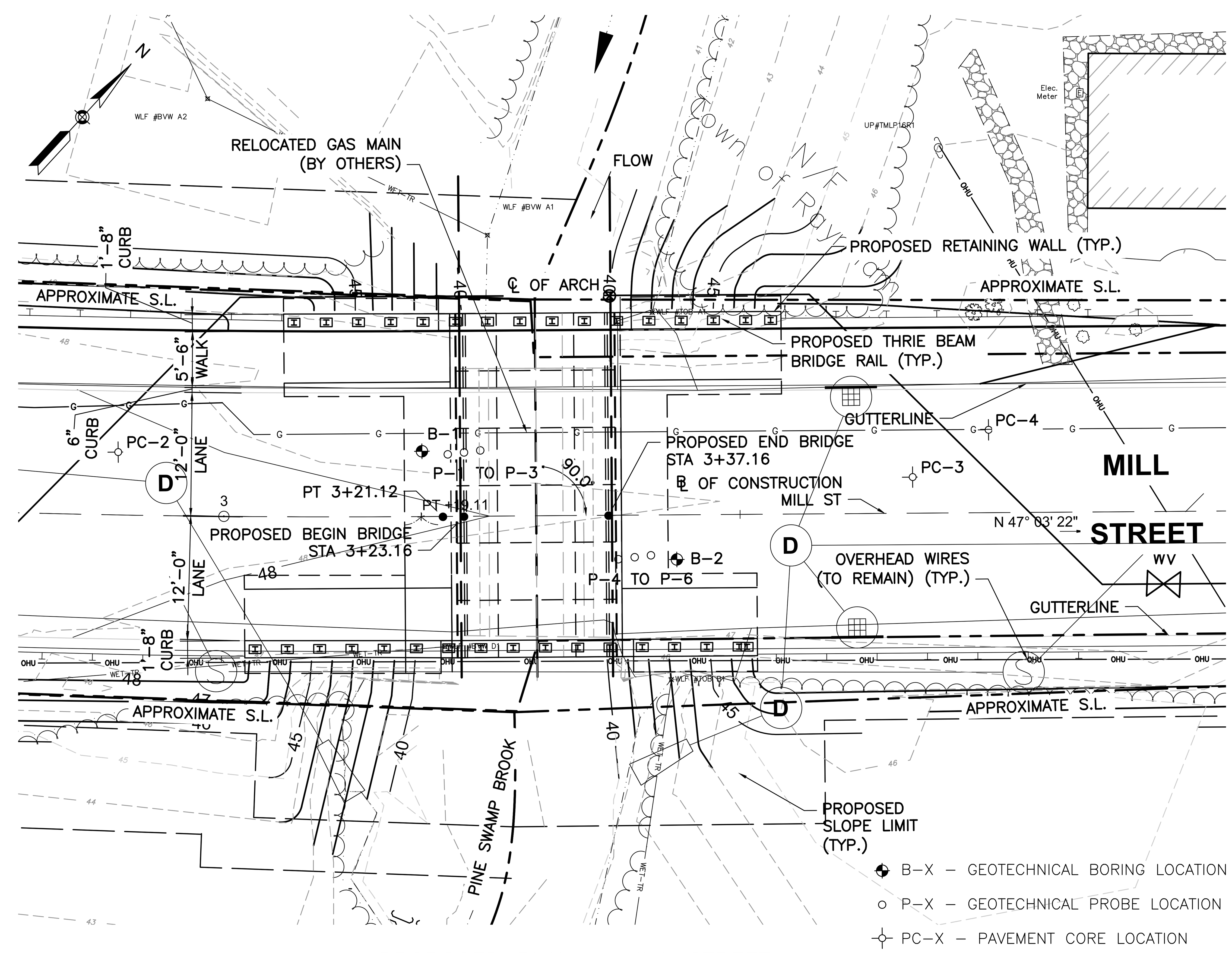

PROPOSED PLAN – MILL STREET

SCALE: $\frac{1}{8}$"=1'0"

GENERAL NOTES:

DESIGN:

IN ACCORDANCE WITH THE 2020 AMERICAN ASSOCIATION OF STATE HIGHWAY AND TRANSPORTATION OFFICIALS LRFD BRIDGE DESIGN SPECIFICATIONS, FOR HL-93 LOADING.

EXISTING CONDITIONS:

DIMENSIONS SHOWN AND DETAILS DEPICTED ARE BASED UPON THE ORIGINAL BRIDGE PLANS AND ARE NOT GUARANTEED. THE CONTRACTOR SHALL DETERMINE AND ESTABLISH ALL DIMENSIONS AND DETAILS NECESSARY FOR COMPLETION OF ALL WORK BY FIELD MEASUREMENT AND SURVEY. THE CONTRACTOR SHALL BE RESPONSIBLE AND NOT ORDER ANY MATERIAL OR COMMENCE ANY FABRICATION UNTIL HE/SHE HAS MADE THE REQUIRED MEASUREMENTS ON THE ACTUAL STRUCTURE AND THE EXTENT OF THE PROPOSED WORK HAS BEEN APPROVED BY THE ENGINEER.

BENCH MARK:

MAG NAIL IN UTILITY POLE STA 1+23.45± O/S 12.6'± RT, EL. 53.38

MAG NAIL IN UTILITY POLE STA 5+37.43± O/S 13.0'± RT, EL. 48.96

SURVEY:

TOPOGRAPHICAL INFORMATION BASED ON THE GROUND SURVEY PERFORMED BY WESTON & SAMPSON PE, LS, LA, PC. IN MARCH 2019. MAPPING PREPARED ON NAD 83 STATE PLANE COORDINATE SYSTEM – MASSACHUSETTS MAINLAND ZONE

SCALES:

SCALES NOTED ON THE PLANS ARE NOT APPLICABLE TO REDUCED SIZE PRINTS. DIVIDE SCALES BY 2 FOR HALF-SIZE PRINTS.

CONSTRUCTION JOINTS:

CONSTRUCTION JOINTS, OTHER THAN THOSE SHOWN ON THE PLANS, WILL NOT BE PERMITTED WITHOUT PRIOR APPROVAL OF THE ENGINEER.

FOUNDATIONS:

FOUNDATIONS MAY BE ALTERED, IF NECESSARY, TO SUIT CONDITIONS ENCOUNTERED DURING CONSTRUCTION, WITH THE APPROVAL OF THE ENGINEER.

UNSUITABLE MATERIALS:

ALL UNSUITABLE MATERIAL SHALL BE REMOVED WITHIN THE LIMITS OF THE FOUNDATIONS OF THE STRUCTURE, AS DIRECTED BY THE ENGINEER.

SEISMIC GROUND SHAKING HAZARD:

DESIGN RETURN PERIOD: 1000-YR
DESIGN SPECTRA:
As = 0.136g
Sds = 0.224g
Sd1 = 0.122g
SITE CLASS = D
SEISMIC DESIGN CATEGORY (SDC) = B

REINFORCEMENT:

REINFORCING STEEL SHALL CONFORM TO THE REQUIREMENTS OF AASHTO M31 GRADE 60. UNLESS OTHERWISE NOTED ON THE CONSTRUCTION DRAWINGS, ALL BARS SHALL BE LAPPED AS FOLLOWS:

MODIFICATION CONDITION	#4 BARS	#5 BARS
1. NONE	21"	26"
2. 12" OF CONCRETE BELOW BAR	29"	36"
3. COATED BARS, COVER < $3d_b$, OR CLEAR SPACING < $6d_b$	31"	39"
4. COATED BARS, ALL OTHER CASES	25"	31"
5. CONDITION 2. AND 3.	35"	44"
6. CONDITION 2. AND 4.	34"	43"

IF THE ABOVE BARS ARE SPACED 6" OR MORE ON CENTER, THE LAP LENGTH SHALL BE 80% OF THE LAP LENGTH GIVEN ABOVE. ALL OTHER BARS SHALL BE LAPPED AS SHOWN ON THE CONSTRUCTION DRAWINGS

EPOXY COATED BARS:

ALL REINFORCING BARS AND SUPPORTING DEVICES SHALL BE COATED UNLESS OTHERWISE NOTED.

CONCRETE MIX:

THE CEMENT CONCRETE SPECIFIED BELOW SHALL BE USED ON THE FOLLOWING BRIDGE COMPONENTS:

4000 PSI, $1\frac{1}{2}$", 565 CEMENT CONCRETE........................FOUNDATIONS, WINGWALLS AND HEADWALLS

5000 PSI, $\frac{3}{4}$", 685 HP CEMENT CONCRETE..................SAFETY CURB AND PRECAST ARCHES

UTILITIES:

THE CONTRACTOR SHALL LOCATE AND PROTECT FROM DAMAGE ALL EXISTING UTILITIES.

HYDRAULIC DESIGN DATA:

HYDRAULIC EVALUATION WAS PERFORMED BY WESTON & SAMPSON. SEE THE HYDRAULIC REPORT DATED JANUARY, 2018.

100 YEAR FLOOD ELEVATIONS WERE TAKEN FROM FLOOD PLAINS ELEVATION DATA PROVIDED BY FEMA (FEMA.GOV).

BASIC (100-YEAR) FLOOD DATA

DRAINAGE AREA: ....5.18 SQ. MILES
DESIGN FLOOD DISCHARGE: ....230 CFS
DESIGN FLOOD RECURRENCE INTERVAL: ....10 YEARS
DESIGN FLOOD ELEVATION: ....43.67 FT

DESIGN FLOOD VELOCITY: ....3.99 FPS

BASE FLOOD DISCHARGE: ....480 CFS
BASE FLOOD ELEVATION: ....44.99 FT

FLOOD OF RECORD

MAX DISCHARGE: ....UNKNOWN
MAX ELEVATION: ....UNKNOWN
DATE: ....UNKNOWN
HISTORY OF ICE FLOES: ....UNKNOWN
EVIDENCE OF SCOUR OR EROSION: ....NONE

COMMONWEALTH OF MASSACHUSETTS
MassDOT, Highway Division
CONCEPTUAL DESIGN IS ACCEPTABLE TO MASSDOT FOR CONTRACTING

STATE BRIDGE ENGINEER | DATE

COPYRIGHT 2017 WESTON & SAMPSON

Weston & Sampson
Weston & Sampson Engineers, Inc.
55 Walkers Brook Drive, Suite 100
Reading, MA 01867
978.532.1900 800.SAMPSON
www.westonandsampson.com

No.	Date	Dr.By	Ck.By	App.By	Description
		A	P	P	R O V E D

REGISTERED PROFESSIONAL ENGINEER | DATE

COMMONWEALTH OF MASSACHUSETTS SCOTT R. BRUSO STRUCTURAL No. 48061 REGISTERED PROFESSIONAL ENGINEER
2022.06.14 15:45:05-04'00'

TOWN OF RAYNHAM, MASSACHUSETTS
DEPARTMENT OF PUBLIC WORKS

PROPOSED BRIDGE REPLACEMENT – BRIDGE NO. R-02-024
MILL STREET OVER PINE SWAMP BROOK

EXISTING PLAN, PROPOSED PLAN AND GENERAL NOTES

CADD NO.	SCALE:	CONTRACT:	JOB NO.	DR.BY	DSN.BY	CHK.BY	APP.BY
–	AS SHOWN	–	2190328	MMM	MMM	MEA	SRB

S-1

FILE NO. –

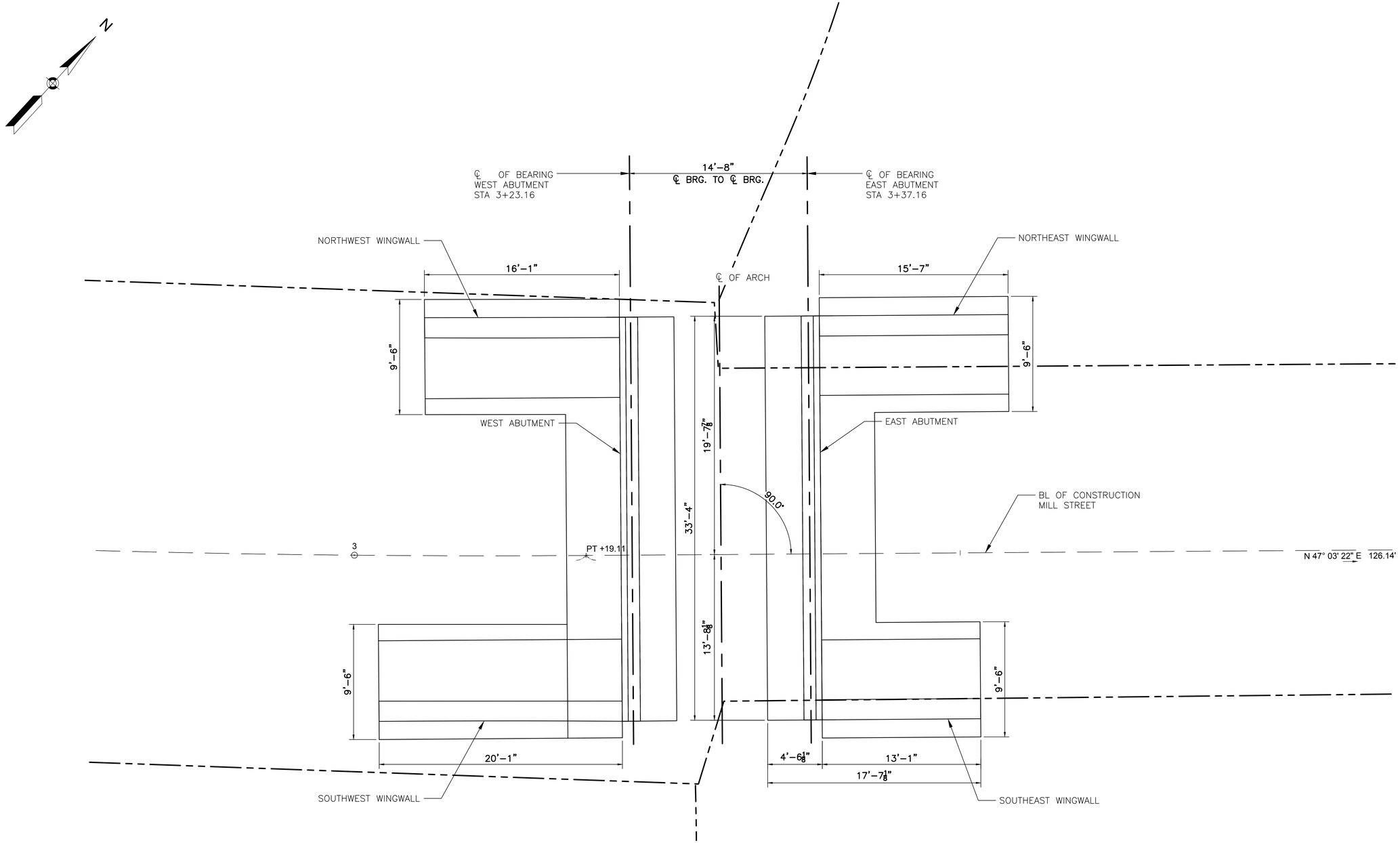

FOUNDATION PLAN

SCALE: 1/8"=1'0"

COMMONWEALTH OF MASSACHUSETTS
MassDOT, Highway Division

CONCEPTUAL DESIGN IS ACCEPTABLE
TO MASSDOT FOR CONTRACTING

STATE BRIDGE ENGINEER DATE

COPYRIGHT 2017 WESTON & SAMPSON

Weston & Sampson
Weston & Sampson Engineers, Inc.
55 Walkers Brook Drive, Suite 100
Reading, MA 01867
978.532.1900 800.SAMPSON
www.westonandsampson.com

No.	Date	Dr.By	Ck.By	App.By	Description
		A	P	R	O V E D

REGISTERED PROFESSIONAL ENGINEER DATE

COMMONWEALTH OF MASSACHUSETTS
SCOTT R. BRUSO
STRUCTURAL
No. 48061
REGISTERED PROFESSIONAL ENGINEER

2022.08.14 15:44:13-04'00'

TOWN OF RAYNHAM, MASSACHUSETTS
DEPARTMENT OF PUBLIC WORKS

PROPOSED BRIDGE REPLACEMENT – BRIDGE NO. R-02-024
MILL STREET OVER PINE SWAMP BROOK

FOOTING LAYOUT

SCALE:	CONTRACT:	JOB NO.	DR.BY	DSN.BY	CHK.BY	APP.BY
AS SHOWN	–	2190328	MMM	MMM	MEA	SRB

CADD NO. –

FILE NO. –

S-2

SHEET 18 OF 23

C:\Users\jaccardi.anthony\appdata\local\temp\AcPublish_5092\REMill Street Structural.dwg

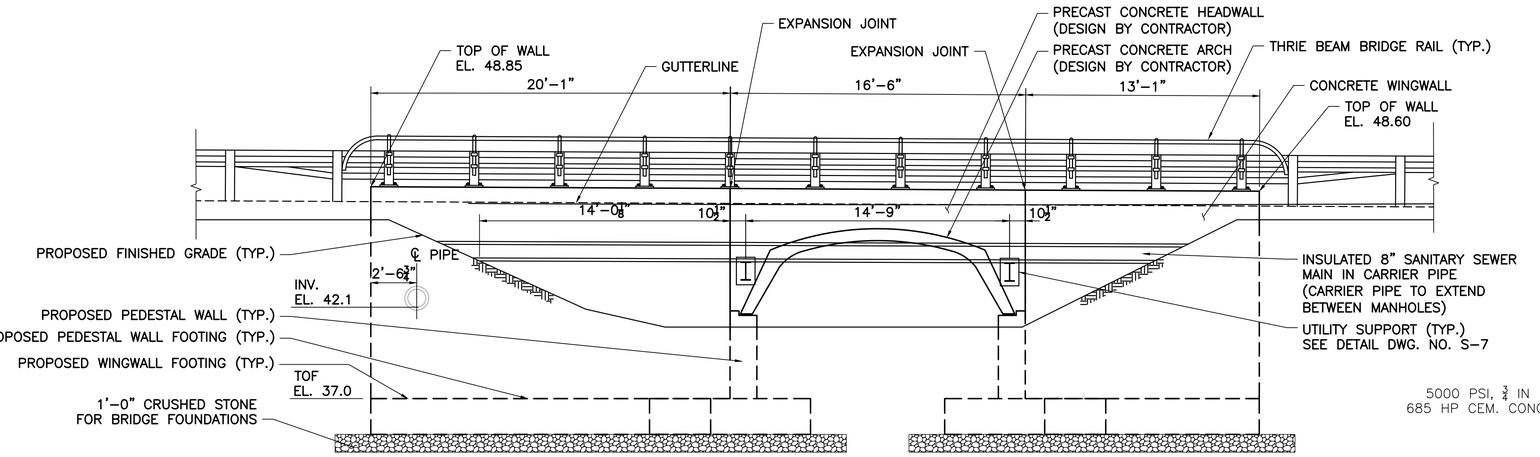

DOWNSTREAM ELEVATION

SCALE: ¼" = 1'–0"

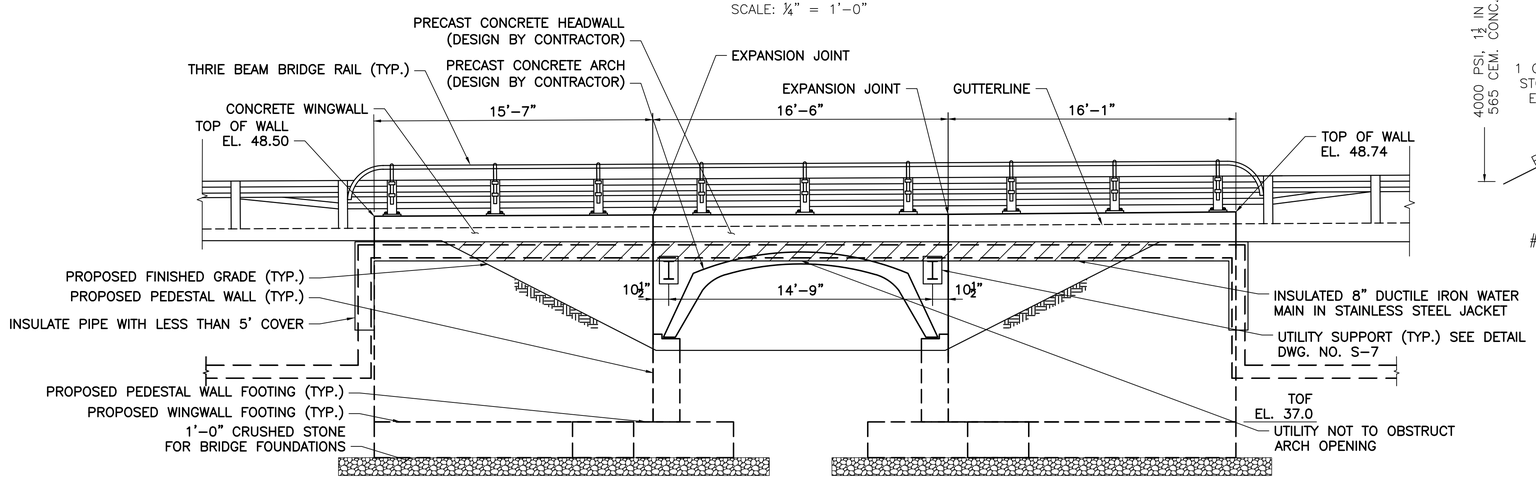

UPSTREAM ELEVATION

SCALE: ¼" = 1'–0"

ALIGNMENT – MILL STREET

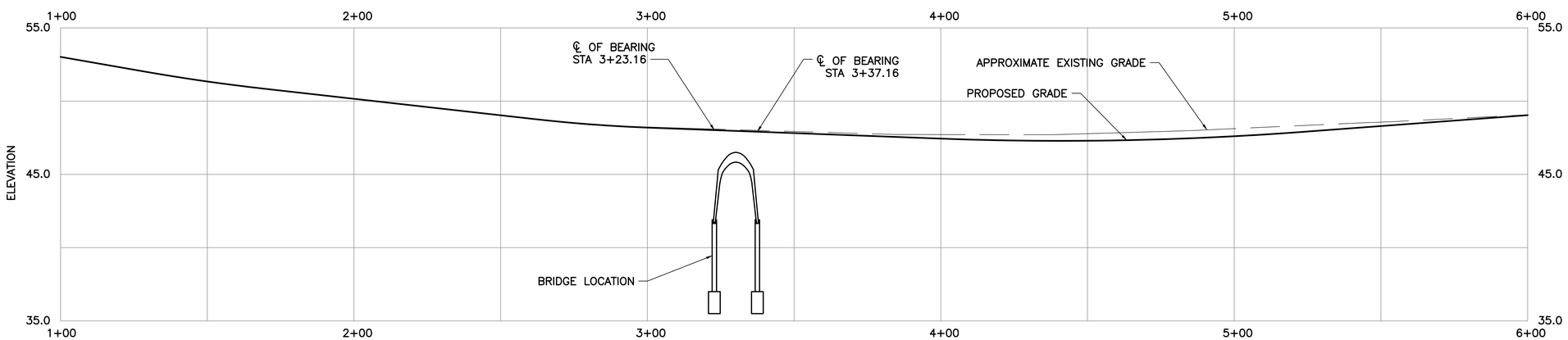

PROFILE

SCALE: H 1" = 20'
V 1" = 4'

NOTES:

1. THE FACTORED BEARING PRESSURE = 2.25 KSF AS PER AASHTO LRFD BRIDGE DESIGN SPECIFICATIONS STRENGTH I LOAD COMBINATION.
2. FACTORED BEARING RESISTANCE = 5.0 KSF. FACTORED BEARING RESISTANCE IS THE PRODUCT OF THE NOMINAL BEARING RESISTANCE AND A RESISTANCE FACTOR OF 0.45

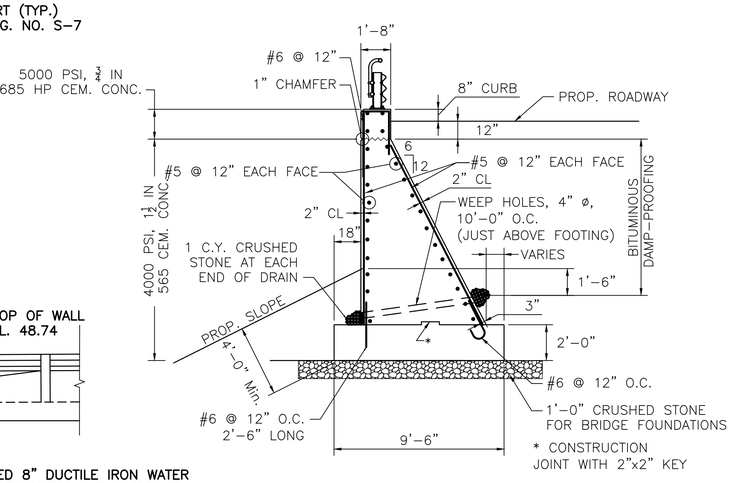

TYPICAL WINGWALL SECTION

SCALE: ¼" = 1'–0"

COMMONWEALTH OF MASSACHUSETTS
MassDOT, Highway Division
CONCEPTUAL DESIGN IS ACCEPTABLE
TO MASSDOT FOR CONTRACTING

STATE BRIDGE ENGINEER | DATE

COPYRIGHT 2017 WESTON & SAMPSON

Weston & Sampson
Weston & Sampson Engineers, Inc.
55 Walkers Brook Drive, Suite 100
Reading, MA 01867
978.532.1900 800.SAMPSON
www.westonandsampson.com

No.	Date	Dr.By	Ck.By	App.By	Description
		A P	P R	O V	E D

DATE

REGISTERED PROFESSIONAL ENGINEER

COMMONWEALTH OF MASSACHUSETTS
SCOTT R. BRUSO
STRUCTURAL
No. 48061
REGISTERED PROFESSIONAL ENGINEER

TOWN OF RAYNHAM, MASSACHUSETTS
DEPARTMENT OF PUBLIC WORKS

PROPOSED BRIDGE REPLACEMENT – BRIDGE NO. R–02–024
MILL STREET OVER PINE SWAMP BROOK

BRIDGE SECTIONS AND ELEVATIONS

SCALE:	CONTRACT:	JOB NO.	DR.BY	DSN.BY	CHK.BY	APP.BY
AS SHOWN	–	2190328	MMM	MMM	MEA	SRB

CADD NO. – | FILE NO. 1

S-3

C:\Users\jaccardi.anthony\appdata\local\temp\AcPublish_5092\REMill Street Structural.dwg

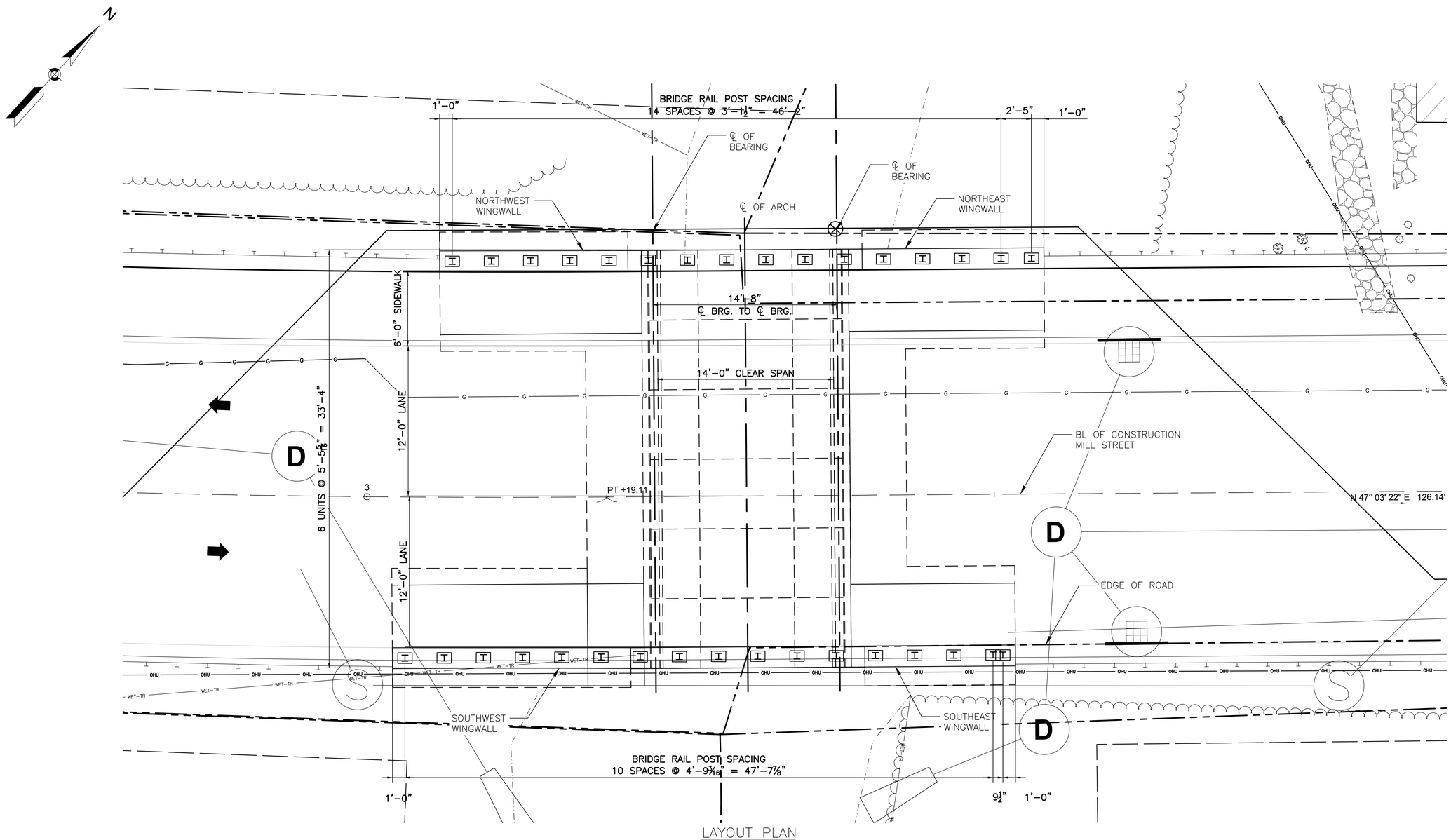

LAYOUT PLAN

SCALE: ¼"=1'0"

COMMONWEALTH OF MASSACHUSETTS
MassDOT, Highway Division
CONCEPTUAL DESIGN IS ACCEPTABLE TO MASSDOT FOR CONTRACTING

STATE BRIDGE ENGINEER | DATE

COPYRIGHT 2017 WESTON & SAMPSON

Weston & Sampson
Weston & Sampson Engineers, Inc.
55 Walkers Brook Drive, Suite 100
Reading, MA 01867
978.532.1900 800.SAMPSON
www.westonandsampson.com

No.	Date	Dr.By	Ck.By	App.By	Description	DATE
		A	P	P	R O V E D	

REGISTERED PROFESSIONAL ENGINEER

COMMONWEALTH OF MASSACHUSETTS
SCOTT R. BRUSO
STRUCTURAL
No. 48061
REGISTERED PROFESSIONAL ENGINEER

2022.06.14 15:43:39-04'00'

TOWN OF RAYNHAM, MASSACHUSETTS
DEPARTMENT OF PUBLIC WORKS

PROPOSED BRIDGE REPLACEMENT – BRIDGE NO. R-02-024
MILL STREET OVER PINE SWAMP BROOK

LAYOUT PLAN

SCALE:	CONTRACT:	JOB NO.	DR.BY	DSN.BY	CHK.BY	APP.BY
AS SHOWN	–	2190328	MMM	MMM	MEA	SRB

CADD NO. 1

FILE NO. 1

S-4

SHEET 20 OF 23

C:\Users\jaccardi.anthony\AppData\Local\Temp\AcPublish_5092\REVMR Street Structural.dwg

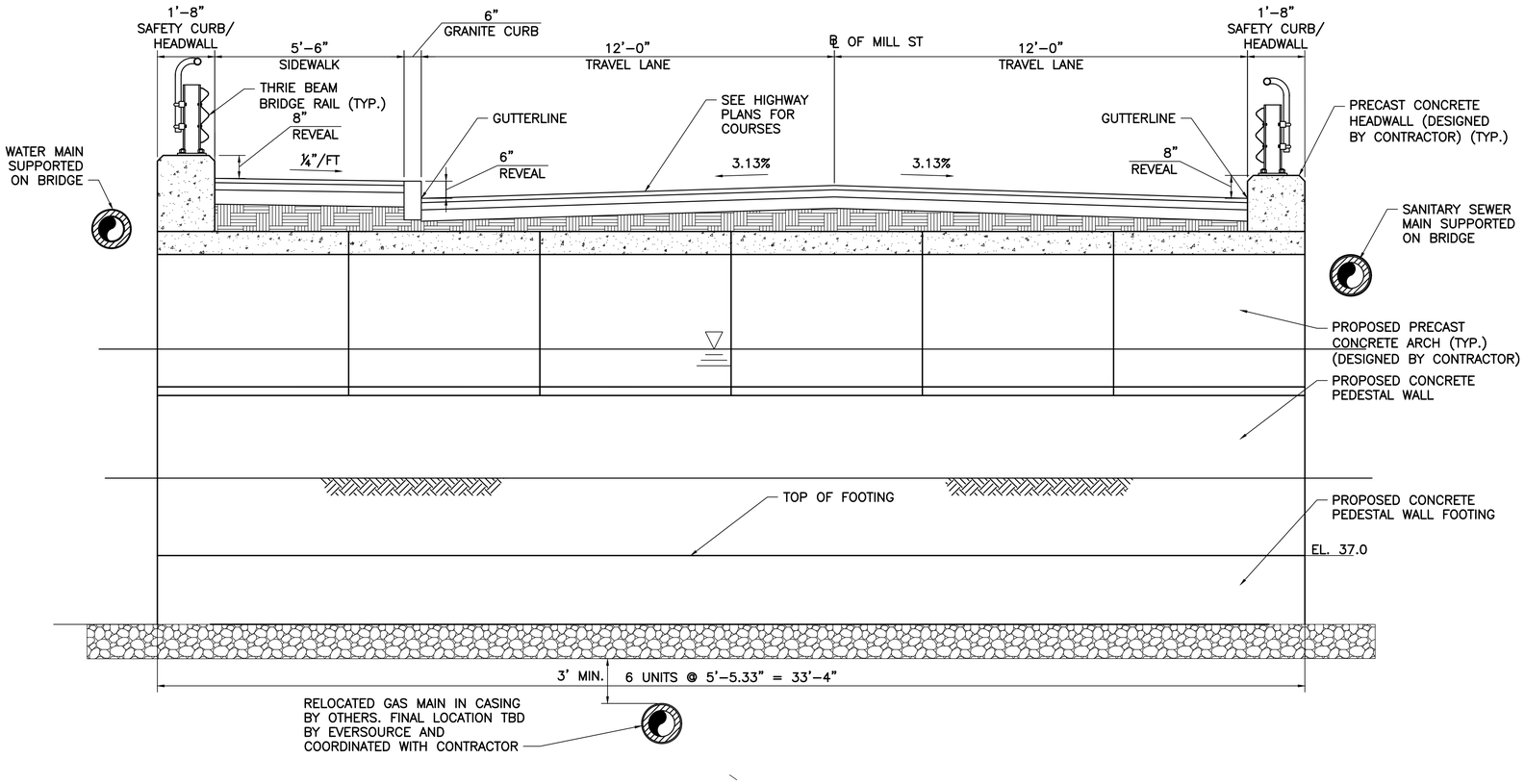

LONGITUDINAL SECTION CUT @ CENTERLINE OF ARCH (LOOKING EAST)

SCALE: ½" = 1'-0"

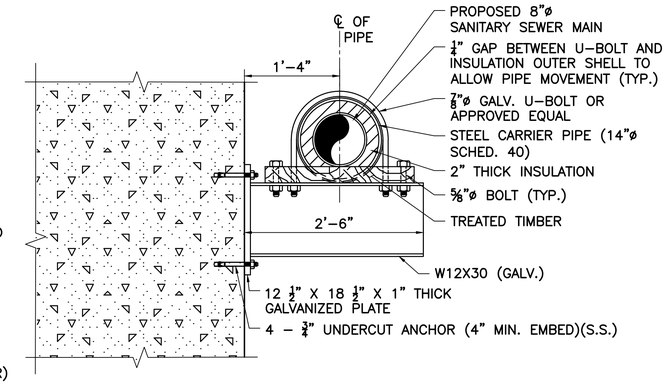

SANITARY SEWER SUPPORT BRACKET

SCALE: 1" = 1'-0"

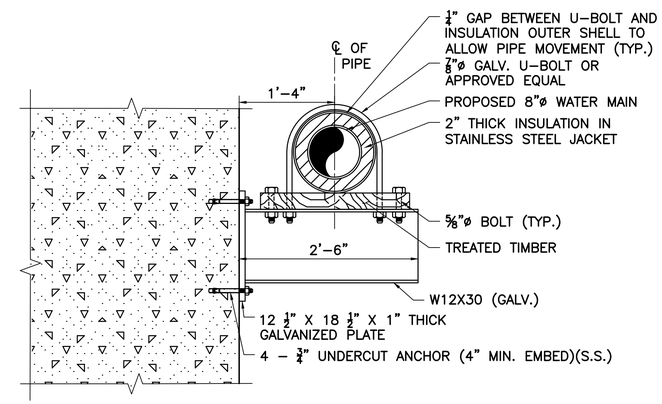

WATER MAIN SUPPORT BRACKET

SCALE: 1" = 1'-0"

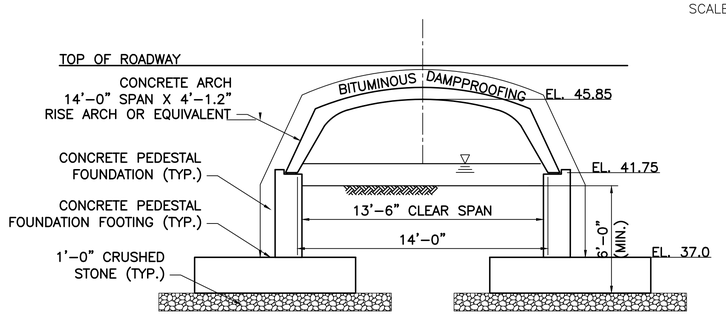

TYPICAL ARCH SECTION

SCALE: ¼" = 1'-0"

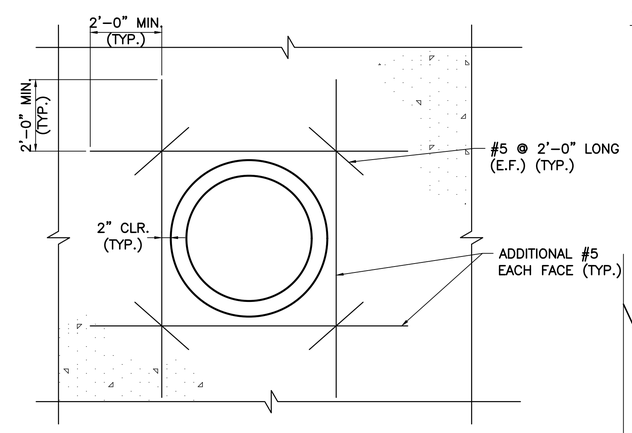

PENETRATION REINFORCEMENT DETAIL

SCALE: 1/2" = 1'-0"

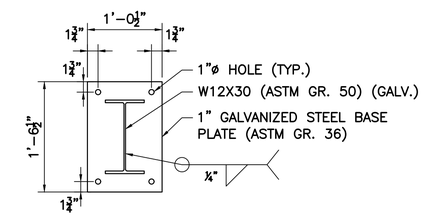

ANCHOR PLATE DETAIL

SCALE: 1" = 1'-0"

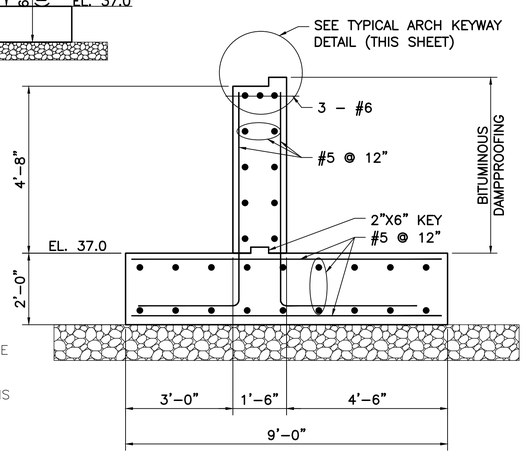

ARCH FOUNDATION SECTION

SCALE: 1/2" = 1'-0"

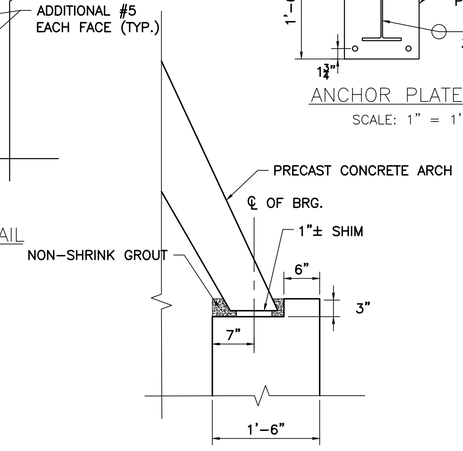

TYPICAL ARCH KEYWAY

SCALE: 1" = 1'-0"

NOTES:

1. THE FACTORED BEARING PRESSURE = 2.25 KSF AS PER AASHTO LRFD BRIDGE DESIGN SPECIFICATIONS STRENGTH I LOAD COMBINATION.
2. FACTORED BEARING RESISTANCE = 5.0 KSF. FACTORED BEARING RESISTANCE IS THE PRODUCT OF THE NOMINAL BEARING RESISTANCE AND A RESISTANCE FACTOR OF 0.45

COMMONWEALTH OF MASSACHUSETTS
MassDOT, Highway Division
CONCEPTUAL DESIGN IS ACCEPTABLE TO MASSDOT FOR CONTRACTING

STATE BRIDGE ENGINEER | DATE

COPYRIGHT 2017 WESTON & SAMPSON

Weston & Sampson
Weston & Sampson Engineers, Inc.
55 Walkers Brook Drive, Suite 100
Reading, MA 01867
978.532.1900 800.SAMPSON
www.westonandsampson.com

No.	Date	Dr.By	Ck.By	App.By	Description
		A	P	R	O V E D

DATE

REGISTERED PROFESSIONAL ENGINEER

COMMONWEALTH OF MASSACHUSETTS
SCOTT R. BRIUSO
STRUCTURAL
No. 48061
REGISTERED PROFESSIONAL ENGINEER

TOWN OF RAYNHAM, MASSACHUSETTS
DEPARTMENT OF PUBLIC WORKS

PROPOSED BRIDGE REPLACEMENT - BRIDGE NO. R-02-024
MILL STREET OVER PINE SWAMP BROOK

BRIDGE DETAILS

SCALE:	CONTRACT:	JOB NO.	DR.BY	DSN.BY	CHK.BY	APP.BY
AS SHOWN	–	2190328	MMM	MMM	MEA	SRB

CADD NO. 1

FILE NO. S-5

SHEET 21 OF 23

C:\Users\jacondi.anthony\appdata\local\temp\AcPublish_5092\[REDMB Street Structural.dwg

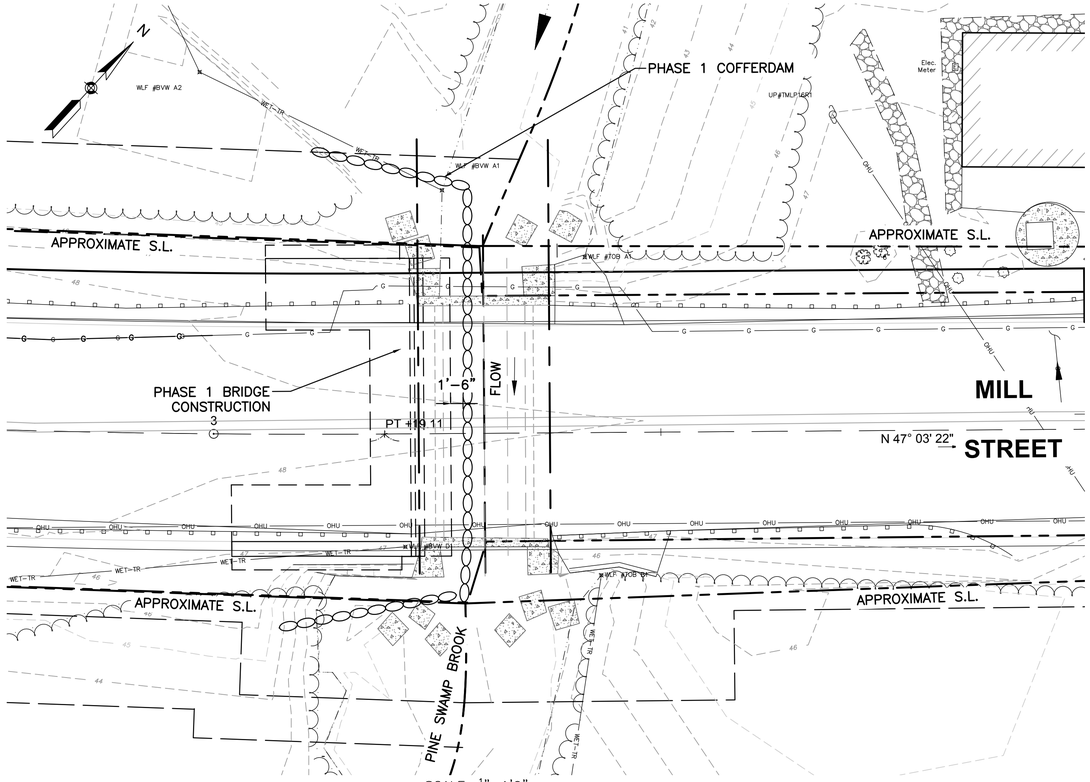

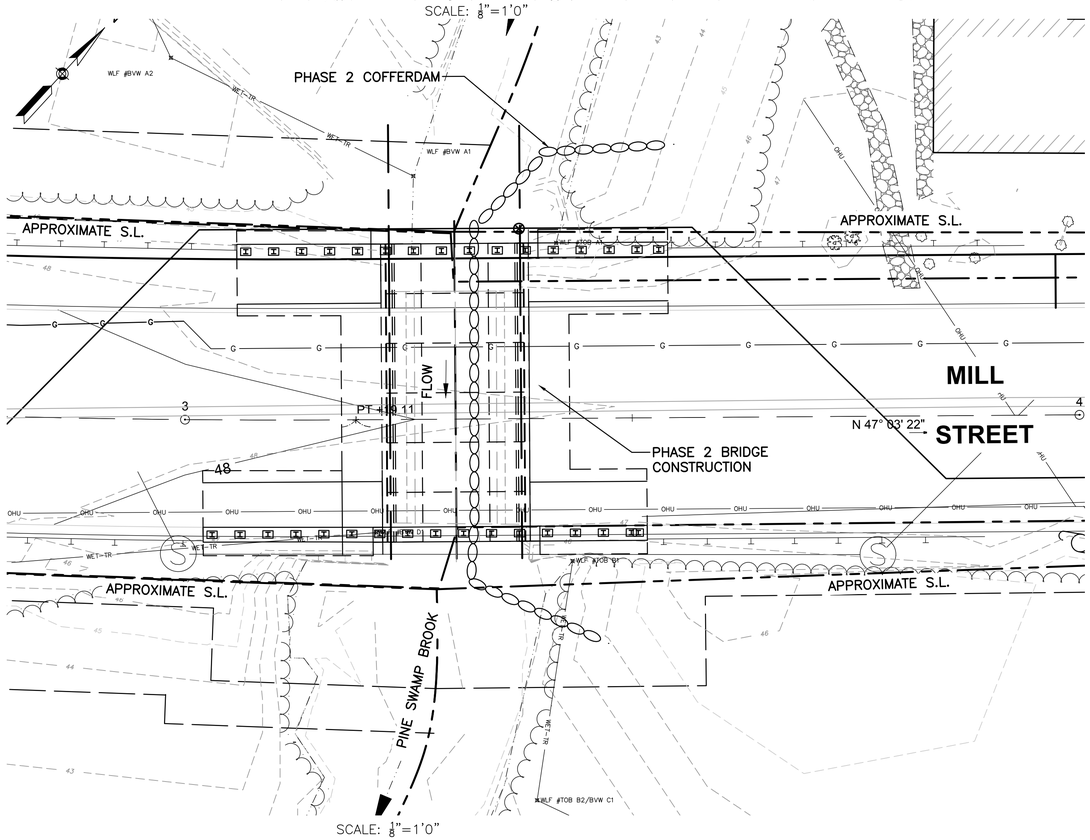

PHASE 1 WATER HANDLING SEQUENCE

1. INSTALL PHASE 1 EROSION AND SEDIMENTATION CONTROL MEASURES.
2. INSTALL STAGE 1 COFFERDAM TO ELEVATION 44 WHILE MAINTAINING FLOW THROUGH THE EASTERN SIDE OF THE BRIDGE OPENING.
3. CONSTRUCT WEST ARCH FOUNDATION AND WINGWALL 1A AND 1B FOOTINGS.
4. BACKFILL AND GRADE WITHIN PHASE 1 CONSTRUCTION AREA.
5. REMOVE PHASE 1 COFFERDAM.

PHASE 2 WATER HANDLING SEQUENCE

1. INSTALL PHASE 2 EROSION AND SEDIMENTATION CONTROL MEASURES.
2. INSTALL STAGE 2 COFFERDAM TO ELEVATION 44 WHILE MAINTAINING FLOW THROUGH THE WESTERN SIDE OF THE BRIDGE OPENING.
3. CONSTRUCT EAST ARCH AND WINGWALL 2A AND 2B FOOTINGS.
4. INSTALL ARCH AND HEADWALLS. CONSTRUCT WINGWALL STEMS.
5. REMOVE PHASE 2 COFFERDAM.
6. BACKFILL AND GRADE.
7. REMOVE PHASE 2 EROSION AND SEDIMENTATION CONTROL MEASURES.

COMMONWEALTH OF MASSACHUSETTS
MassDOT, Highway Division
CONCEPTUAL DESIGN IS ACCEPTABLE TO MASSDOT FOR CONTRACTING

STATE BRIDGE ENGINEER | DATE

COPYRIGHT 2017 WESTON & SAMPSON

Weston & Sampson
Weston & Sampson Engineers, Inc.
55 Walkers Brook Drive, Suite 100
Reading, MA 01867
978.532.1900 800.SAMPSON
www.westonandsampson.com

No.	Date	Dr.By	Ck.By	App.By	Description
		A	P	R	O V E D

REGISTERED PROFESSIONAL ENGINEER — DATE

COMMONWEALTH OF MASSACHUSETTS
SCOTT R. BRUSO
STRUCTURAL
No. 48061
REGISTERED PROFESSIONAL ENGINEER
2023.06.14 15:43:06-04'00'

TOWN OF RAYNHAM, MASSACHUSETTS
DEPARTMENT OF PUBLIC WORKS
PROPOSED BRIDGE REPLACEMENT – BRIDGE NO. R-02-024
MILL STREET OVER PINE SWAMP BROOK
STAGE CONSTRUCTION/WATER HANDLING PLAN

APP.BY	CHK.BY	DSN.BY	DR.BY	JOB NO.	CONTRACT:	SCALE:	CADD NO.
SRB	MEA	MMM	MMM	2190328	–	AS SHOWN	1

S-6

FILE NO. 1

SHEET 22 OF 23

C:\Users\accordi.anthony\AppData\Local\temp\AcPublish_5092\REVMR Street Structural.dwg

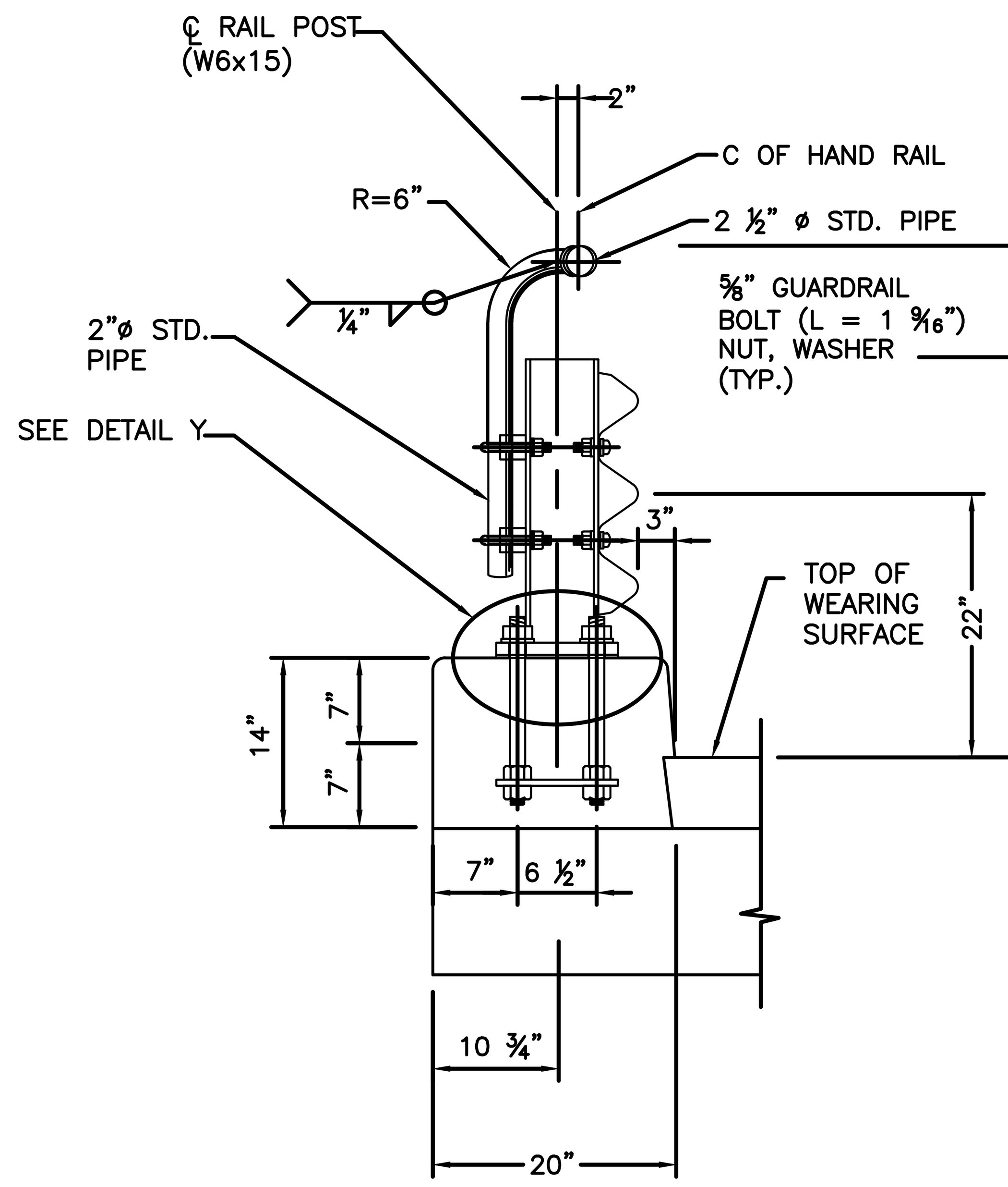

THRIE BEAM SECTION
NOT TO SCALE

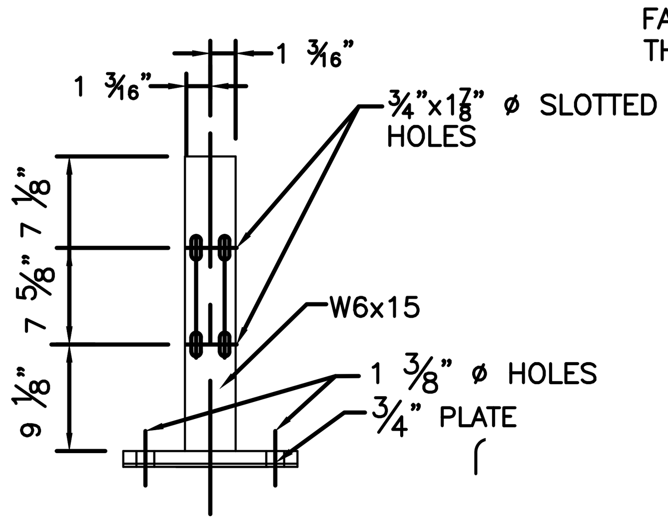

RAIL POST DETAIL (FRONT VIEW)
NOT TO SCALE

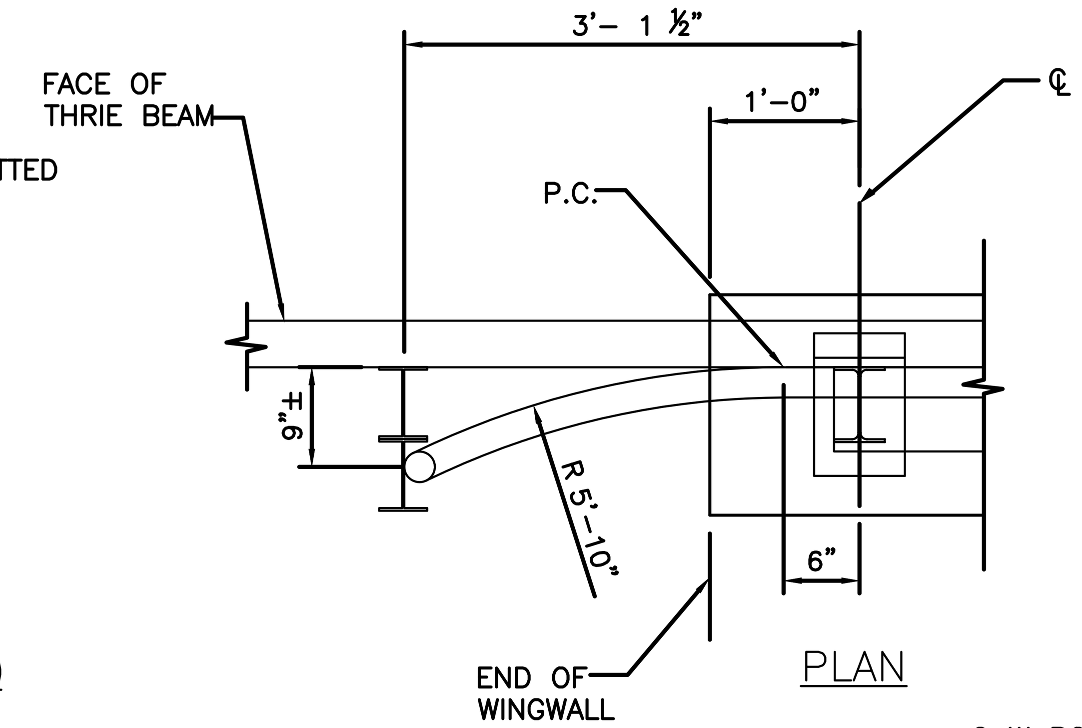

PLAN

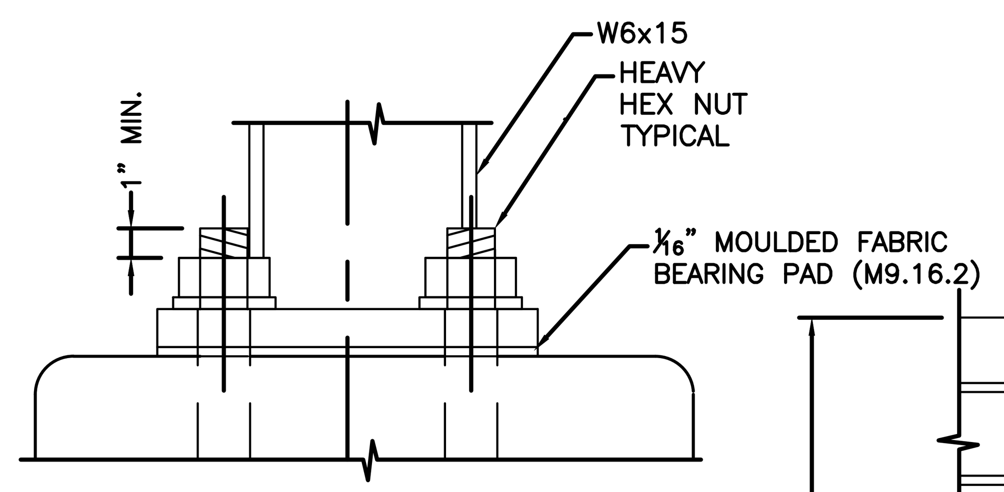

DETAIL Y
NOT TO SCALE

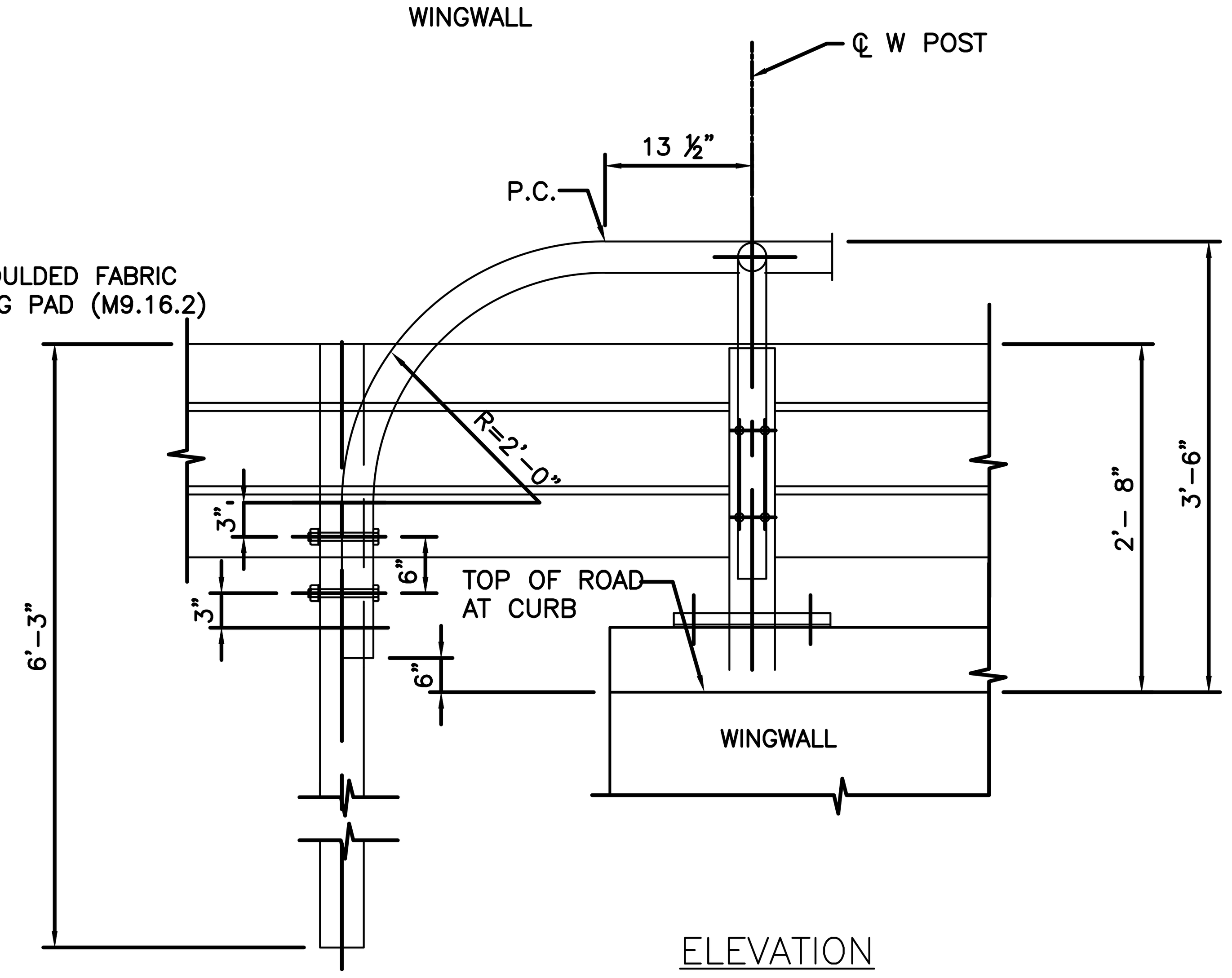

ELEVATION

TRANSITION DETAILS
NOT TO SCALE

THRIE BEAM NOTES:

1. ALL STEEL CONNECTING BOLTS AND FASTENERS FOR POSTS SHALL CONFORM TO ASTM A325 TYPE III. ANCHOR BOLTS SHALL CONFORM TO ASTM F1554, GRADE 105.
2. RAIL POSTS AND ANCHOR PLATES SHALL BE SEATED ON MOLDED FABRIC BEARING PADS MEETING M9.16.2 AND HAVING THE SAME DIMENSIONS AS THE PLATE. ADDITIONAL PADS OR HALF PADS MAY BE USED IN SHIMMING FOR ALIGNMENT.
3. RAIL POSTS SHALL BE SET PERPENDICULAR TO ROADWAY PROFILE GRADE AND VERTICALLY IN CROSS SECTION, EXCEPT THAT THE RAIL POSTS SHALL BE ALIGNED BY THE USE OF SHIMS SO THAT IN THE FINAL ADJUSTMENT NO PART SHALL DEVIATE MORE THAN ONE HALF INCH FROM TRUE HORIZONTAL ALIGNMENT. THE SHIMS SHALL BE 3"x 1 ¾" AND PLACED BETWEEN THE POST AND THE THRIE BEAM RAIL. THE THICKNESS OF THE SHIMS SHALL BE DETERMINED BY THE CONTRACTOR AND SHOWN IN THE SHOP DRAWINGS FOR APPROVAL BY THE ENGINEER BEFORE ORDERING MATERIAL FOR THIS WORK.
4. MINIMUM LENGTH OF THE THRIE BEAM SECTIONS IS EQUAL TO ONE POST SPACE.
5. THRIE BEAM GUARD RAIL STEEL SHALL CONFORM TO THE AASHTO M180, CLASS B, TYPE II AND SHALL BE 10 GAGE THICK.
6. POSTS, HAND RAIL STEEL, ANCHOR PLATES AND BASE PLATES SHALL BE FABRICATED FROM STRUCTURAL STEEL CONFORMING TO ASTM 500 GRADE B AND AASHTO M270 GRADE 50, AS APPLICABLE. STRUCTURAL STEEL COMPONENTS SHALL BE HOT DIPPED GALVANIZED AFTER FABRICATION IN ACCORDANCE WITH AASHTO M111.
7. SPECIAL DRILLING OF THE THRIE BEAM MAY BE REQUIRED AT THE SPLICES. (ALL DRILLING DETAILS ARE TO BE SHOWN ON THE SHOP DRAWINGS.)
8. PLACE A REFLECTORIZED WASHER IN THE UPPER VALLEY OF THRIE BEAM EVERY THIRD POST.

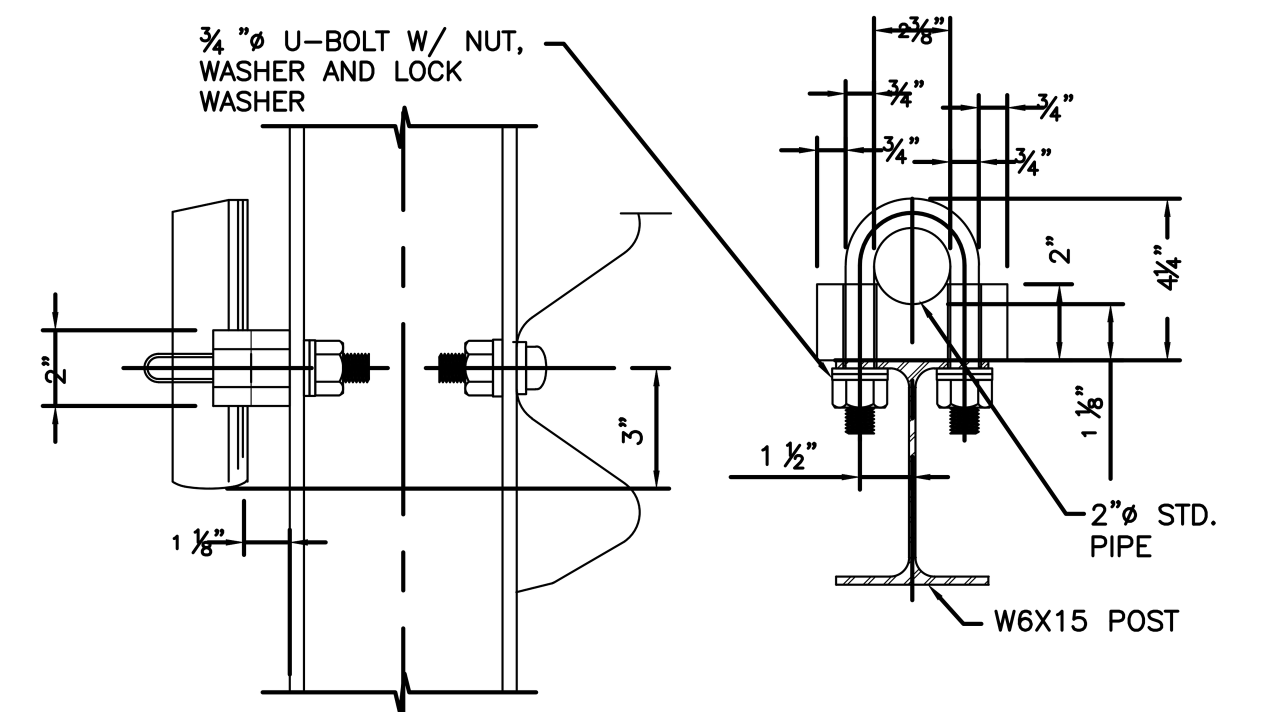

ELEVATION

PLAN

SADDLE DETAILS
NOT TO SCALE

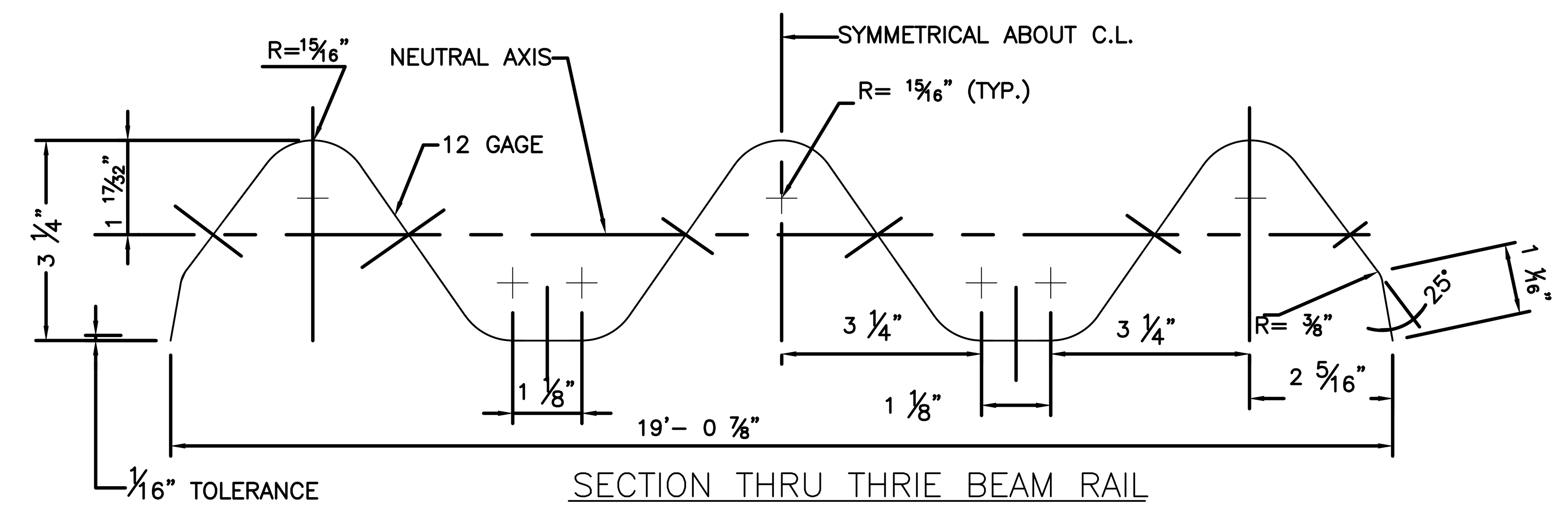

SECTION THRU THRIE BEAM RAIL
NOT TO SCALE

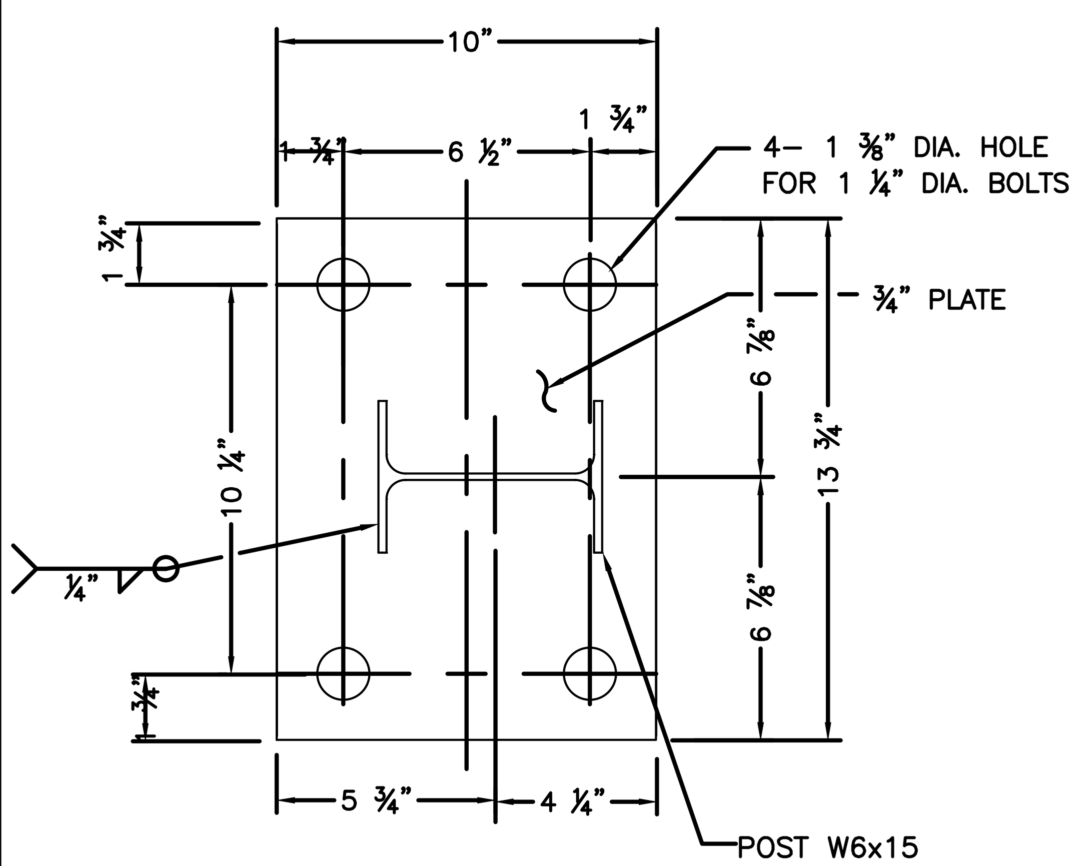

BASE PLATE DETAIL
NOT TO SCALE

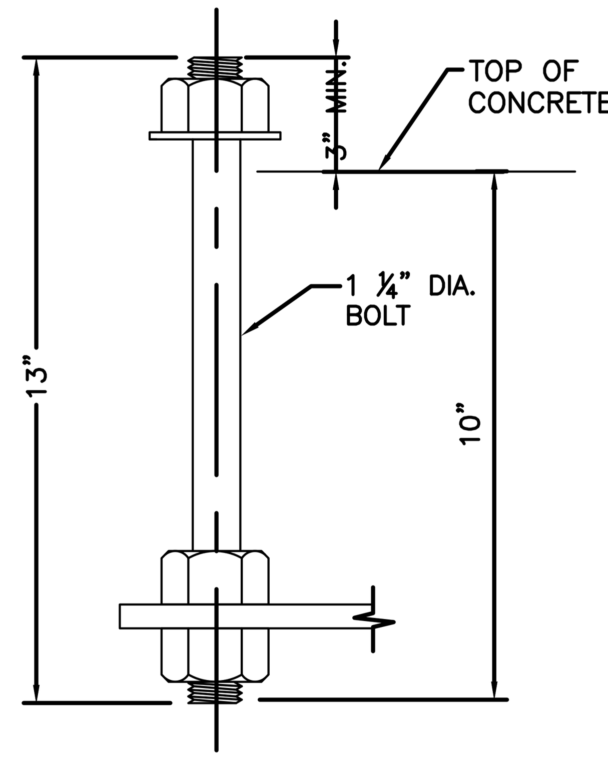

BOLT DETAIL
NOT TO SCALE

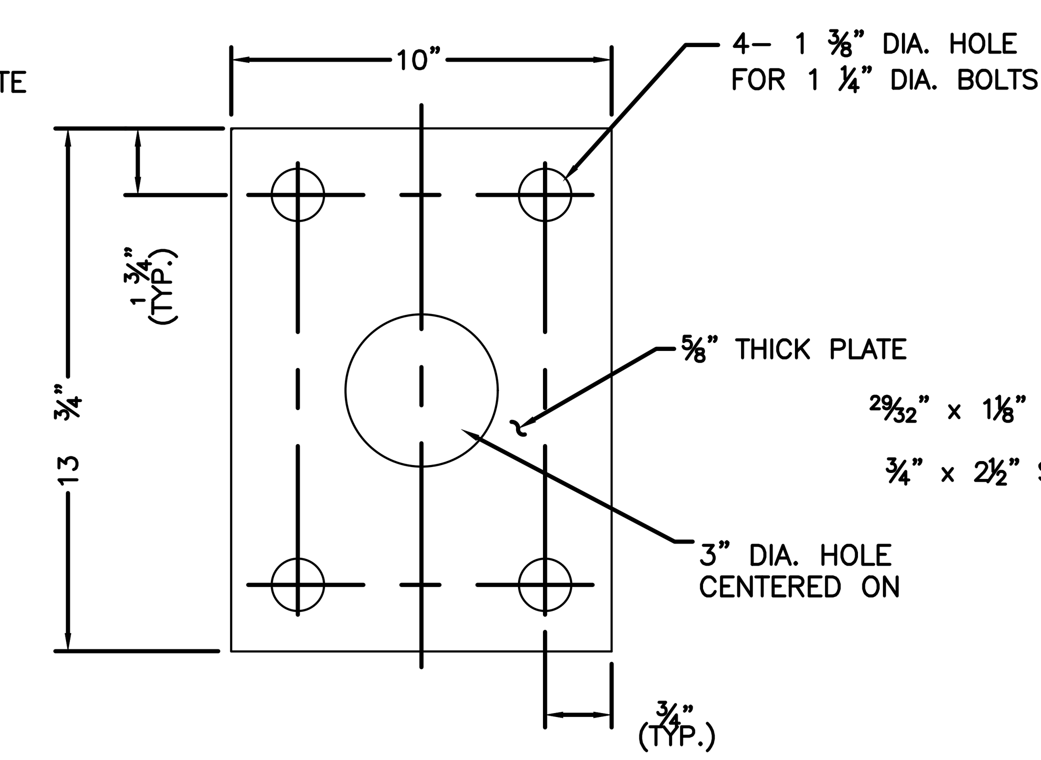

ANCHOR PLATE DETAIL

NOT TO SCALE

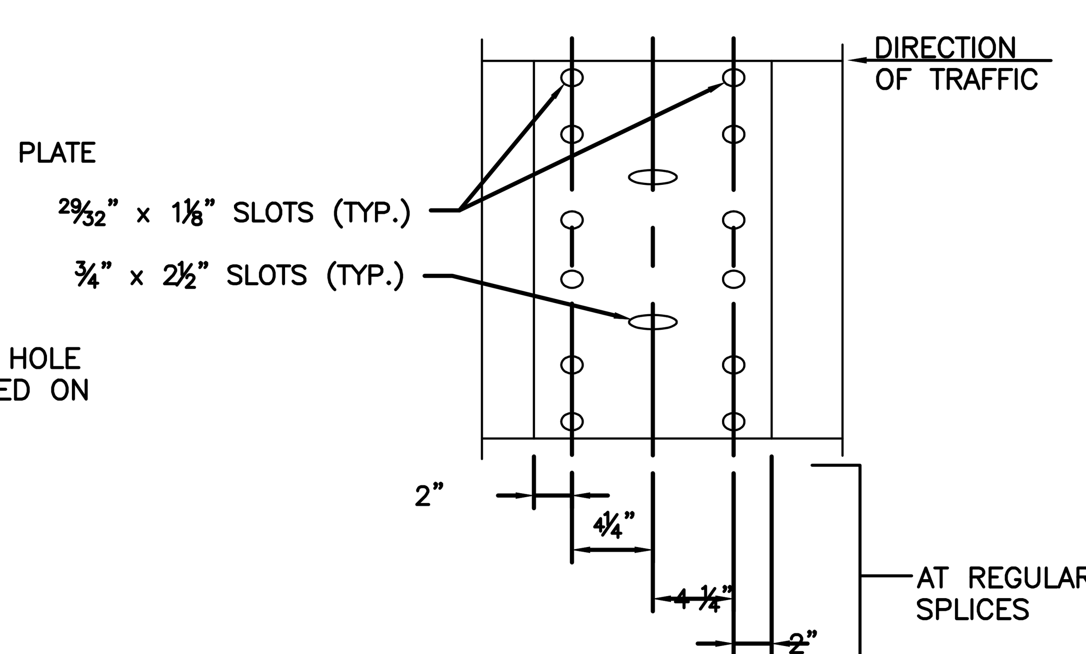

THRIE BEAM RAIL SPLICE DETAILS
NOT TO SCALE

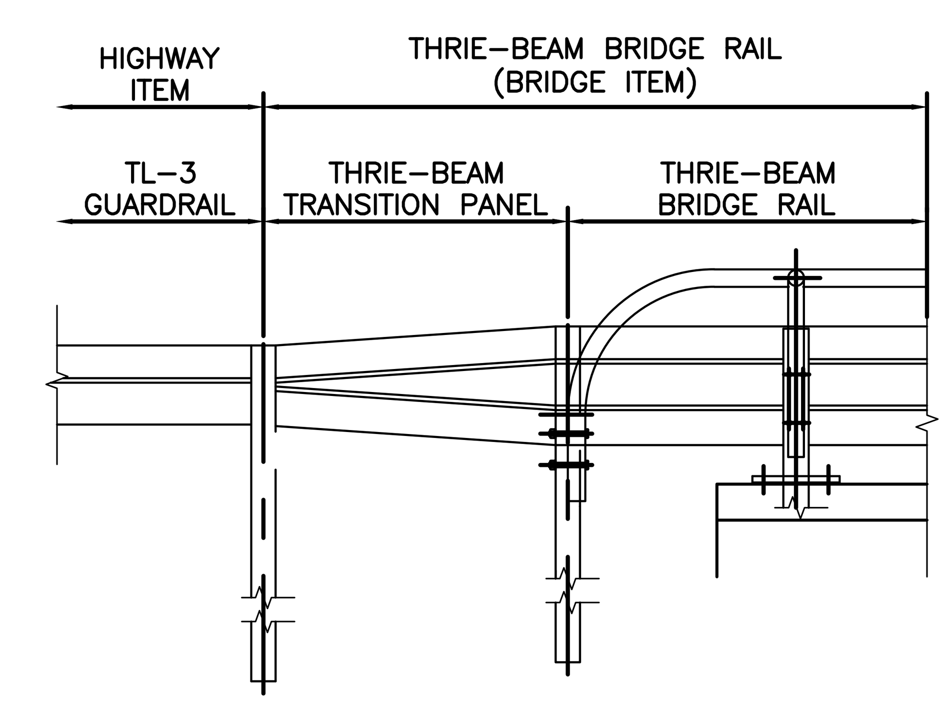

THRIE-BEAM TRANSITION DETAIL
NOT TO SCALE

NOTE: THRIE-BEAM TRANSITION PANEL SHALL BE INCLUDED IN THE COST OF THRIE-BEAM BRIDGE RAIL

COMMONWEALTH OF MASSACHUSETTS
MassDOT, Highway Division
CONCEPTUAL DESIGN IS ACCEPTABLE TO MASSDOT FOR CONTRACTING

STATE BRIDGE ENGINEER | DATE

COPYRIGHT 2017 WESTON & SAMPSON

Weston & Sampson
Weston & Sampson Engineers, Inc.
55 Walkers Brook Drive, Suite 100
Reading, MA 01867
978.532.1900 800.SAMPSON
www.westonandsampson.com

No.	Date	Dr.By	Ck.By	App.By	Description
		A	P	P	R O V E D

REGISTERED PROFESSIONAL ENGINEER | DATE

COMMONWEALTH OF MASSACHUSETTS
SCOTT R. BRUSO
STRUCTURAL
No. 48061
REGISTERED PROFESSIONAL ENGINEER

TOWN OF RAYNHAM, MASSACHUSETTS
DEPARTMENT OF PUBLIC WORKS
PROPOSED BRIDGE REPLACEMENT - BRIDGE NO. R-02-024
MILL STREET OVER PINE SWAMP BROOK

THRIE-BEAM RAIL DETAILS

SCALE:	CONTRACT:	JOB NO.	DR.BY	DSN.BY	CHK.BY	APP.BY
AS SHOWN	-	2190328	MMM	MMM	MEA	SRB

CADD NO. -
FILE NO. -

S-7